Furnished by Mike Davenport in Dec 82. DS. File 6280/7

444-7621

0525:JPM
N62470-77-C-7526
4 September 1981

From: Commander, Atlantic Division, Naval Facilities Engineering Command
To: Resident Officer in Chargeoof Construction, Naval Regional Medical Center Field Office, Camp Lejeune, North Carolina 28542

Subj: Contract N62470-77-C-7526 - 205 Bed Hospital, Naval Regional Medical Center, Marine Corps Base, Camp Lejeune, North Carolina

Encl: (1) LANTNAVFACENGCOM NORFOLK memo 114:CRT ser 6280 of 31 Aug 1981

1. Enclosure (1) is provided for your use on the subject contract. Please advise this Command if the incinerator and boiler construction completion and operation will not occur on or before 1 July 1982 so that the State of North Carolina may be notified in accordance with enclosure (1).

A. R. GREENMORE, JR.
By direction

Blind copy to:
0525
05DF
114

Note : this was carried over by 05 - They said construction is expected to slip and they are requesting an extension to Nov. 82.

J. Bailey
9/8/81

McLaren
Olin
9-3-81
NRS

DEPARTMENT OF THE NAVY
ATLANTIC DIVISION
NAVAL FACILITIES ENGINEERING COMMAND
NORFOLK, VIRGINIA 23511

TELEPHONE NO.
444-4950

IN REPLY REFER TO:
114:CRT
6280

3 1 AUG 1981

MEMORANDUM FOR CODE 09A21B2

Subj: Air Pollution Permit for Boilers and Incinerators at the new Naval Regional Medical Center, Camp Lejeune

Encl: (1) North Carolina Department of Natural Resources and Community Development ltr of 3 Aug 1981 with enclosed permit

1. Enclosure (1) is forwarded for your information and inclusion in the project folder. Your attention is drawn to item no. four in the enclosed permit. This item requires construction completion and operation of the incinerator and the two boilers on or before 1 July 1982. If this date will not be met, Code 114 should be notified so a permit change can be requested from the State of North Carolina.

Please advise if we need to change to Nov 82

J. R. BAILEY
Head, Environmental Quality Branch
Utilities, Energy and Environmental Division

Copy to:
05

North Carolina Department of Natural Resources & Community Development
James B. Hunt, Jr., Governor
Howard N. Lee, Secretary
DIVISION OF ENVIRONMENTAL MANAGEMENT

August 3, 1981

J.C. Dempsey
Lieutenant Commander, CEC, USN
Environmental Protection
Coordination Officer
Atlantic Division
Naval Facilities Engineering Command
Norfolk, VA 23511

Subject: Permit No. 4663
U.S. Naval Regional Medical Center
Marine Corps Base
Camp Lejeune, North Carolina
Onslow County

Dear Mr. Dempsey:

In accordance with your application received May 20, 1981, we are forwarding herewith Permit No. 4663 to U.S. Naval Regional Medical Center, Marine Corps Base, Camp Lejeune, North Carolina for the construction and/or operation of air pollution abatement facilities and/or emission sources.

If any parts, requirements, or limitations contained in this Permit are unacceptable to you, you have the right to an adjudicatory hearing before a hearing officer upon written demand to the Director within 30 days following receipt of this Permit, identifying the specific issues to be contended. Unless such demand is made, this Permit shall be final and binding.

This permit shall be effective from the date of issuance until April 1, 1986, is nontransferable to future owners and operators, and shall be subject to the conditions and limitations as specified therein.

For Federal PSD tracking purposes, changes to the facility have consumed a maximum of 13.5 lbs/hr of particulate and 67.3 lbs/hr of SO_2.

Sincerely,

Charles Wakild
Regional Supervisor

Enclosure

cc: Mike Sewell
Robert Jamieson
Wilmington Regional Office
Central Files

NORTH CAROLINA

ENVIRONMENTAL MANAGEMENT COMMISSION

DEPARTMENT OF NATURAL RESOURCES AND COMMUNITY DEVELOPMENT

Raleigh

PERMIT

For the Discharge of Air Contaminants Into the Atmpshere

In accordance with the provisions of Article 21B of Chapter 143, General Statutes of North Carolina as amended, and other applicable Laws, Rules and Regulations,

PERMISSION IS HEREBY GRANTED TO

U.S. Naval Regional Medical Center
Marine Corps Base
Camp Lejeune, North Carolina

FOR THE

construction and operation of two No. 6 oil-fired boilers (14.625 million BTU per hour heat input each) and a gas-fired, 60 pounds per hour, type IV waste, multiple chamber incinerator with a 400,000 BTU per hour (minimum) primary burner and a 400,000 BTU per hour (minimum) secondary burner and appurtenances installed to remove particulate, visible, and odorous emissions, and for the discharge of the associated stack gases into the outdoor atmosphere at its facility located at Marine Corps Base, Camp Lejeune, North Carolina, Onslow County,

in accordance with the application received May 20, 1981, and in conformity with the plans, specifications, and other supporting data, all of which are filed with the Department of Natural Resources and Community Development and are incorporated as part of this Permit.

This Permit shall be effective from the date of its issuance until April 1, 1986, is nontransferable to future owners and operators, and shall be subject to the following specified conditions and limitations:

1. The facility shall be properly operated and maintained at all times in such a manner as to effect an overall reduction in air pollution in keeping with the application and otherwise to reduce air contamination to the extent necessary to comply with applicable Environmental Management Commission Regulations, including 15 NCAC 2D .0505, .0521, and .0522.

2. Reports on the operation and maintenance of the facilities shall be submitted to the Division of Environmental Management at such intervals and in such form and detail as may be required by the Division. Information required in such reports may include, but is not limited to, process weight rates, firing rates, hours of operation, and preventive maintenance schedules.

3. When particulate and/or visible emissions, due to a malfunction of the process or control equipment, are or may be in excess of Environmental Management Commission Regulations, the Regional Supervisor, Wilmington Region 919-256-4161, of the Division of Environmental Management shall be notified as promptly as possible but in no case later than twelve (12) hours following the start of such malfunction. Such notice shall specify the nature and cause of the malfunction, the time when such malfunction was first observed, the expected duration, and an estimate of the rate of emission. The term malfunction shall not be construed to include start-up or shut-down periods when particulate, visible, or odorous emissions exceed Environmental Management Commission Regulations when the duration of such period is less than one hour. Furthermore, any period of duration one hour or greater when particulate, visible, or odorous emissions exceed Environmental Management Commission Regulations shall be construed as a malfunction.

4. This Permit shall become voidable unless the facilities are constructed in accordance with the approved plans, specifications and other supporting data and completed and placed in operation on or before July 1, 1982, or as this date may be amended by provision of a subsequent Special Order or Permit issued by the Environmental Management Commission.

5. U.S. Naval Regional Medical Center, at least ninety (90) days prior to the expiration of this Permit, shall request its extension by letter. The letter should include the permit number and a description of modifications, if any, that have been made.

6. This permit is subject to revocation or modification upon a determination that information contained in the application or presented in support thereof is incorrect, conditions under which the permit renewal was granted have changed, or violations of conditions contained in the permit have occurred.

7. One boiler will not operate more than 6100 hours per year.

8. A violation of any term or condition of this Permit shall subject the Permittee to enforcement procedures contained in North Carolina General Statutes 143-215.114, including assessment of civil penalties.

Permit issued this the 3rd day of August, 1981.

NORTH CAROLINA ENVIRONMENTAL MANAGEMENT COMMISSION

Charles Wakild, Regional Supervisor
Division of Environmental Management
By Authority of the Environmental Management Commission

DEPARTMENT OF THE NAVY
ATLANTIC DIVISION
NAVAL FACILITIES ENGINEERING COMMAND
NORFOLK, VIRGINIA 23511

TELEPHONE NO.
(804) 444-4950
IN REPLY REFER TO:
114:CRT
6280

15 MAY 1981

Air Quality Section
Southeastern Field Office
Division of Environmental Management
Department of Natural and Economic Resources
7225 Wrightsville Avenue
Wilmington, NC 28401

Gentlemen:

The Navy is currently constructing a new Regional Medical Facility at Camp Lejeune, North Carolina. As part of this construction project, two new oil-fired boilers and a pathological incinerator are being constructed. Enclosed is the required construction permit application for the incinerator and the fuel-burning equipment.

If you have any questions or need any additional information, please contact Mr. Charles Thompson of my staff at telephone number (804) 444-4950.

E A Barco

E.A. BARCO, P.E.
Director, Utilities, Energy
and Environmental Division
By direction of the Commander

Copy to:
09A21A

RECEIVED

— Rec'd AQ-5/28/81

Wayne
Note Permit Applications

NORTH CAROLINA

ENVIRONMENTAL MANAGEMENT COMMISSION

RALEIGH

APPLICATION FOR

A "PERMIT"

TO CONSTRUCT AND OPERATE AIR

POLLUTION ABATEMENT FACILITIES AND/OR EMISSION SOURCES

Filed By: Atlantic Division, Naval

(Name)

Facilities Engineering Command

(Address)

Norfolk, VA 23511

AQ-22

APPLICATION FOR A "PERMIT"
To Construct and Operate Air Pollution Abatement Facilities and/or Emission Sources
Three Copies to be Submitted
Fourth Copy Should be Retained by Applicant

Date: _____

In accordance with the provisions of Article 21 of Chapter 143, General Statutes of North Carolina as amended, application is hereby made by U.S. Naval Regional Medical Center, Marine Corps Base, Camp Lejeune
(Name of Company, Establishment, Town, Etc.) (Include Division or Plant Name in Addition to Parent Company if Applicable) in the County of Onslow at Camp Lejeune
(Street and City or Town Address of Plant or Facility)
for issuance of a "Permit" to construct and operate air pollution abatement facilities and/or emissions sources at above location as specified in the accompanying drawings, specifications, and other pertinent data:

1. Nature of Operation Conducted at the Above Facility:
Hospital

2. Description of ~~Process(es) Whose Emission(s) is/are to be Controlled by the Facility or~~ Source(s) Which is/are to be Constructed ~~or Altered~~. (Complete Section I)
One (1) Incinerator with afterburner, Advanced Combustion Systems Model CAI-100
Two (2) 150 psi steam boilers, oil-fired (#6), Cleaver Brooks CB-600-350

3. Furnish Type and Narrative Description of Proposed Control Device(s).(Complete Appropriate Supplemental Data Sheets for Control Device to be Installed and/or Operated. Include Make and Model Number of Control Device(s) and Number of Identical Units).

4.

Contaminant Emitted:	Weight Rate of Emissions (lb/hr): Without Control Device	Weight Rate of Emissions (lb/hr): With Control Device	Control Efficiency (%): Without Control Device	Control Efficiency (%): With Control Device
See attached sheet "A"				

5. Name and Address of Engineering Firm that Prepared Plans:
Facility Designed by:
A Joint Venture
Lockwood Greene/Six Associates
P. O. Box 491, Spartanburg, S. C. 29304

6. Ultimate Disposition of Collected Pollutants:
Marine Corps Base, Camp Lejeune
Landfill

7. Date on Which Facilities are to be Completed and in Operation:
July, 19 82

8. Indicate Period of Time for Which Facilities are Estimated to be Adequate: 20 Years

9. Estimate Cost of Air Pollution Control Device $ ----

10. Hours Facility is Operated Per Year: 8736

Name: _____
(Responsible Individual of Company Purchasing/Operating Facility...PLEASE PRINT)

Mailing Address: Atlantic Division, Naval Facilities
Engineering Command
Norfolk, VA 23511

Signature and Title: John G. Dempsey
J.C. DEMPSEY
Lieutenant Commander, CEC, USN
Environmental Protection
Coordination Officer

Telephone Number: _____

AQ-22 Rev. 11/73

Please attach process engineering drawings, equipment drawings and flow diagrams for the process(es) or source(s) being constructed or altered.

Name of Process: Pathological Incinerators

Total Weight of Materials Entering this Process: 12.5 lb/hr

Volume and Temperature of Air Flow Entering Control Device: _____ CFM @ _____ °F

Volume and Temperature of Effluent at Discharge Point to Atmosphere: 37,200 CFM @ 1400 °F

Pollutant(s) to be Controlled: _____

Height of Process Stack or Vent Above Ground Level 60 ft. Inside area of Stack 3.1 ft².

Particulate Emission Rate (Before Control) .115 lb/hr

Particle Size Distribution: 0-5μ ___ %, 5-10μ ___ %, 10-20μ ___ %, 20-30μ ___ %, 30-40μ ___ %, 40-50μ ___ %, >50μ ___ %

Gaseous Emission(s):

Name (Chemical Formula)	μg/m³, PPM	or lb/hr
SO_2		.003
Hydrocarbons		.006
NO_x		.132
CO		.016

II. SUPPLEMENTARY DATA FOR INCINERATORS (Including Conical Incinerators)

Circle Type of Waste or Indicate Composition: Type 0 Type I Type II Type III (Type IV)

Combustible: 16% Non-Combustible: 4% Moisture: 80 % Heat Value 1,400 BTU/lb

Total Waste Generated Per WEEK 25 lb.

Hours Incinerator will be Operated: 8. hrs/week

Design Capacity for Above Waste: 60 lbs/hr

Manufacturer and Model Number; Approximate Cost: Advanced Combustion Systems Model CAI-100

Primary Chamber Volume: 37 ft.³

Secondary Chamber Volume: 6.3 ft.³ (includes 6' of s

Air Requirements: Total Excess Air 200 Draft: Natural ___ Induced ___ Other Forced

Overfire Air: ___ cfm Underfire Air: ___ cfm

Is there an Electronically Controlled, Exhaust Gas Temperature Modulated, Damper Installed on the Conical Incinerator for: Overfire Air Supply ___, Underfire Air Supply ___, Dome ___ Temperature Set Point

Flame Port Temperature: 1200-1400°F Secondary Chamber Temperature: 1800 °F

Is there a Continuous Exhaust Gas Temperature Recorder? Yes ___ No X

Stack:

Inside Area 3.1 ft.² Height 60 ft. Gas Velocity 200 ft/sec Temperature 400°F Fan Capacity Primary 500 cfm Secondary 985 cfm Stack Lined? Yes

Is there a Wet Scrubber?

Yes ___ No X Flow Rate of H_2O into Scrubber ___ gal/min Temperature Before Scrubber ___ °F

Aux. Fuel: Oil ___ Gas ___ Other None

Main Fuel Propane

Burner Rating: Primary Chamber 400 M BTU/hr Secondary Chamber 400.M BTU/hr Stack ___ BTU/hr

Primary Burner: Is there a Preheat Timer? Yes X No ___ Preheating Time: 10. min.

Secondary Burner or Afterburner: Is there a Timer? Yes X No ___ Length of Time Burner is Operated ___ min.

Is the Timer Reset by Charging Door? Yes ___ No X Other Mode of Burner Control Manual Reset

Type of Feed: Manual X Automatic ___ If Automatic, Describe _____

Distance from Incinerator to Nearest Structure(s) in which People Live and/or Work (1) ft. (1) See Locat in buildin

Signature: John C. Dempsey Title: _____

J.C. DEMPSEY
Lieutenant Commander, CEC, USN
Environmental Protection
Coordination Officer

Name of Process: #6 Oil Fire[illegible] Steam Boilers

Total Weight of Materials Entering this Process: 780 lb/hr or ton/hr

Volume and Temperature of Air Flow Entering Control Device: ---- CFM @ -- °F

Volume and Temperature of Effluent at Discharge Point to Atmosphere: 9,200 CFM @ 466 °F

Pollutant(s) to be Controlled: ---

Height of Process Stack or Vent Above Ground Level 85 ft. Inside area of Stack 3.4 ft^2.

Particulate Emission Rate (Before Control) 4.64 lb/hr

Particle Size Distribution: 0-5μ ___ %, 5-10μ ___ %, 10-20μ ___ %, 20-30μ ___ %, 30-40μ ___ %, 40-50μ ___ %, >50μ ___ %

Gaseous Emission(s):

Name (Chemical Formula)	μg/m³, PPM	or lb/hr
SO_2		64.94
Hydrocarbons		.20
NO_x		15.80
CO		88

II. SUPPLEMENTARY DATA FOR INCINERATORS (Including Conical Incinerators)

Circle Type of Waste or Indicate Composition: Type 0 Type I Type II Type III Type IV

Combustible: ___ % Non-Combustible: ___ % Moisture: ___ % Heat Value: ___ BTU/lb

Total Waste Generated Per Day: ___ lb. Hours Incinerator will be Operated: ___ hrs/day

Design Capacity for Above Waste: ___ lbs/hr Manufacturer and Model Number; Approximate Cost:

Primary Chamber Volume: ___ $ft.^3$ Secondary Chamber Volume: ___ $ft.^3$

Air Requirements: Total Excess Air ___ % Draft: Natural ___ Induced ___ Other ___

Overfire Air: ___ cfm Underfire Air: ___ cfm

Is there an Electronically Controlled, Exhaust Gas Temperature Modulated, Damper Installed on the Conical Incinerator for: Overfire Air Supply ___, Underfire Air Supply ___, Dome ___ Temperature Set Poin

Flame Port Temperature: ___ °F Secondary Chamber Temperature: ___ °F

Is there a Continuous Exhaust Gas Temperature Recorder? Yes ___ No ___

Stack:

Inside Area ___ $ft.^2$ Height ___ ft. Gas Velocity ___ ft/sec Temperature ___ °F Fan Capacity ___ cfm Stack Lined? ___

Is there a Wet Scrubber?

Yes ___ No ___ Flow Rate of H_2O into Scrubber ___ gal/min Temperature Before Scrubber ___ °F

Aux. Fuel: Oil ___ Gas ___ Other ___ Burner Rating: Primary Chamber ___ BTU/hr Secondary Chamber ___ BTU/hr Stack ___ BTU/hr

Primary Burner: Is there a Preheat Timer? Yes ___ No ___ Preheating Time: ___ min.

Secondary Burner or Afterburner: Is there a Timer? Yes ___ No ___ Length of Time Burner is Operated ___ min.

Is the Timer Reset by Charging Door? Yes ___ No ___ Other Mode of Burner Control ___

Type of Feed: Manual ___ Automatic ___ If Automatic, Describe ___

Distance from Incinerator to Nearest Structure(s) in which People Live and/or Work. ___ ft.

Signature: J.C. Dempsey Title: ___

J.C. DEMPSEY
Lieutenant Commander, CEC, USN
Environmental Protection
Coordination Officer

recovery boilers.

Type of Fuel Burning Source Steam Boiler Stack Height Above Ground Level 85 ft. Inside Area of Stack 3.

Make and Model Number Cleaver-Brooks Model CB600-350-150 lbs. Volume of Furnace 92.5 ft^3

Specify ~~Actual~~ MAXIMUM Amount of Each Fuel Used in Above Source (s):

Coal -- lb/hr; Oil Grade 6 Amount 97.5 gal/hr, at 150 MBTU/gal and 8 lb/gal or 780 lb/hr

Wood -- lb/hr; Natural Gas -- SCF/hr, at -- BTU/SCF; Other #2 Fuel Oil (140,000 Btu/gal.) will b
(Specify type, amount and heating value) for st
only.

Specify ~~Maximum~~ ACTUAL Per conversation with Charles Thompson 6/19/81 Rating for Each Fuel Burning Source:

Coal -- Oil 78 Wood -- Natural Gas -- Other

Maximum Sulfur Content of Fuel 2.1 % Specify ~~Standby~~ Start-up Fuel #2 Maximum % Sulfur 1.

Type of Solid Fuel Burning Equipment Used: Hand Fired -- Spreader Stoker -- Underfeed Stoker -- Chain Grate --

Traveling Grate -- Pulverizer -- Cyclone Furnace -- Other (Specify) --

Ash Content of Fuel:

Coal -- % Wood -- % Other -- %

Specify Method and Schedule of Tube Cleaning, if Applicable:

Lancing N/A Tube Blowing N/A Schedule 1-2 times/ye

Emission Control Equipment (Describe in Detail in Sections IV and V) None

Collection Device: Wet -- Dry -- Steam Injection -- Air Injection -- Is Collected Flyash Reinjected

Draft on Boiler (Natural ____ ~~Induced~~ Forced X) 4600 cfm at 466 °F

Total Number of Fuel Burning Sources Within Property Boundaries: None within hospital area. Facility is on Camp Lejeune Reservation but 6-7 miles from base serv

Maximum Capacity Rating, by Type, for All Fuel Burning Units Excluding that Itemized Above: (Total Like Units)

Coal -- lb/hr Wood -- lb/hr Oil -- gal/hr Natural Gas -- SCF/hr

IV. SUPPLEMENTARY DATA FOR WET COLLECTION DEVICES

Not Applicable

*Attach detailed engineering drawings of the control device and particle size versus removal efficiency curves.

Liquid Scrubbing Medium and Additives: ____

Total Liquid Injection Rate (Include Recirculated and Make-up Rates) ____ gal/min or gal/1000 ft^3

Operating Pressure Drop Across Device ____ in H_2O

ANSWER FOLLOWING QUESTIONS FOR SPECIFIC DEVICE:

VENTURI SCRUBBER: Inlet Area ____ in^2 Throat Area ____ in^2 Throat Velocity ____ ft/sec

GRAVITY SPRAY CHAMBER: Number of Nozzles ____ Liquid Droplet Size ____ u Co-Current ____ Countercurrent ____

WET CYCLONE:

Body Diameter ____ in Length ____ in

Inlet Area ____ in^2 Number of Nozzles ____

Outlet Area ____ in^2

PACKED TOWER OR PLATE TOWER:

Cross-Sectional Area ____ ft^2 Type of Plate ____

Length ____ ft Depth of Packing ____

Number of Plates ____ Type of Packing ____

OTHER WET COLLECTION DEVICES: GIVE COMPLETE DESCRIPTION INCLUDING DESIGN PARAMETERS AND DETAILED ENGINEERING DRAWINGS.

Signature: John C. Dempsey Title: ____

J.C. DEMPSEY
Lieutenant Commander, CEC, USN
Environmental Protection
Coordination Officer

APPLICATION FOR A "PERMIT"
TO CONSTRUCT EMISSION SOURCES
LANTDIV - NAVAL REGIONAL MEDICAL CENTER
CAMP LEJEUNE

A. Reference Paragraph 4 of application, we have tabulated emissions below, as an aid to evaluation. The two boilers will have a common stack, and the incinerator will have its own stack.

It is projected that one boiler will operate throughout the year and will be supplemented by the second unit in the winter for a period of about five months. For purposes of annual emissions, we have assumed one boiler at full rate for twelve months and the other at full rate for four months. Fuel will be #6 oil, 2.1% maximum sulfur.

The incinerator is expected to be used once a week for a period of up to eight hours. The unit is sized such that waste should be completely burned (except for ash) in two hours. Annual rate is estimated for eight hours/week of fuel combustion and two hours/week for waste. Fuel will be propane, odorized with up to four grains of sulfur/100 cf.

1. BOILER

Emission	Weight Rate of Emission (One Boiler on #6 Fuel) #/Hour	Weight Rate of Emission (Two Boilers on #6 Fuel)	Annual Emis as Describe Above Tons/
Particulate	2.34	4.64	13.6
SO_x (as SO_2)	32.47	64.94	188.2
Hydrocarbons	.10	.20	.6
NO_x	7.90	15.80	68.0
CO	.44	.88	2.8

2. INCINERATOR

Emission	Weight Rate of Fuel Emission #/Hour	Weight Rate of Waste Emission #/Hour	Annual Emission as Described Above Tons/Yr.
Particulate	.015	.1	.006
SO_x	.003		.0006
Hydrocarbons	.006		.0012
NO_x	.092	.04	.02
CO	.016		.003

3. TOTAL EMISSIONS-ANNUAL BASIS

Due to small amount of waste and infrequent operation of the incinerator, we propose that the annual boiler emissions above be treated as the total emissions for the facility.

B. Attachments to Application.

1. Facility Location. (For Section VI)

   a. Location Map - For Camp Lejeune
   b. Vicinity Map - For Hospital Area Boundaries
   c. Site Map - Locating Facility

2. Incinerator Detail.

   a. Proposal from Advanced Combustion Systems
   b. Tabulation Basic Incinerator Information
   c. General Arrangement - Incincerator CAI-100
   d. Information - Primary and Secondary Burners

3. Boilers - No detail included - Units are standard Cleaver-Brooks fire-tube boilers Model CB600-350-150 lb.

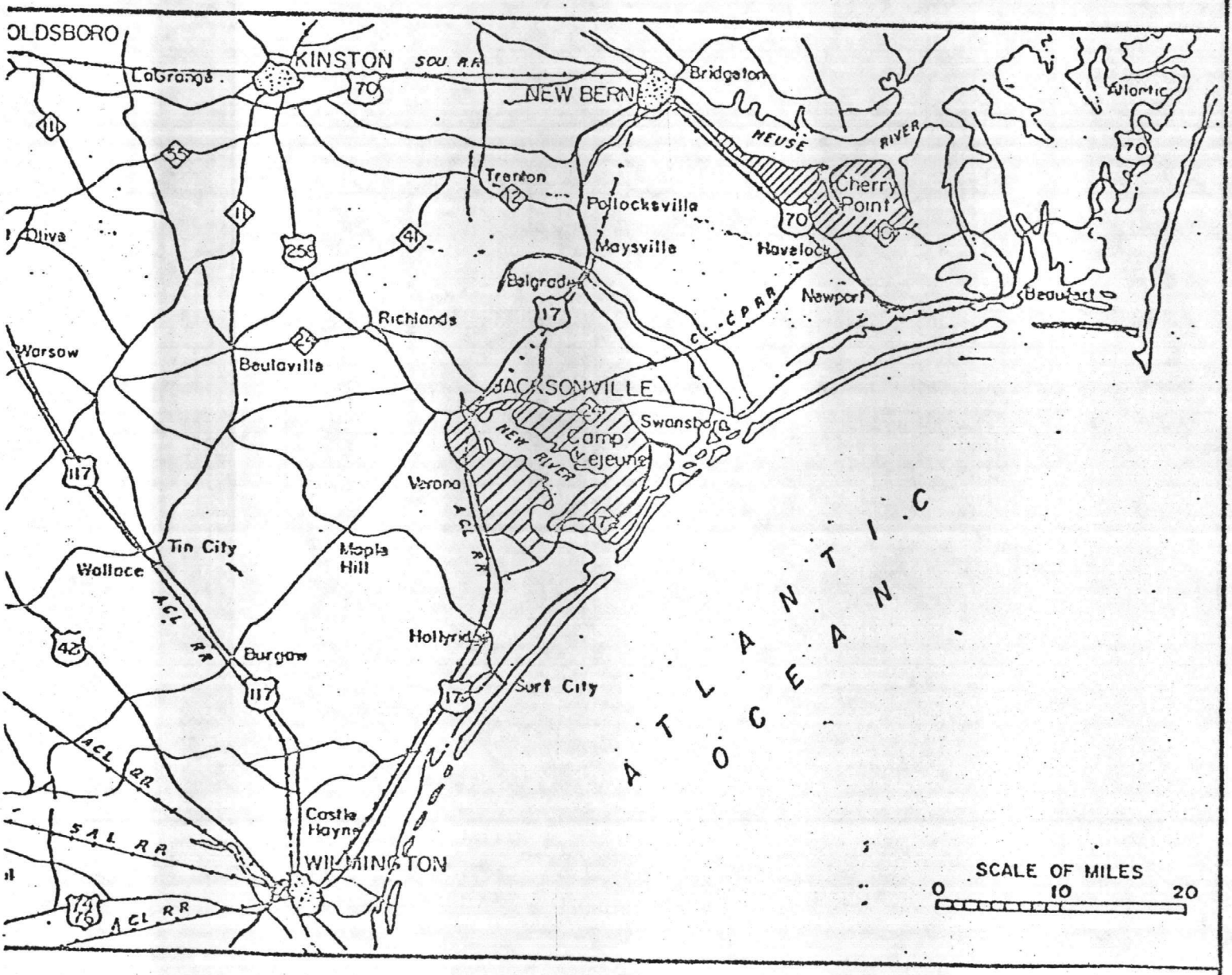

SECTION VI

LOCATION MAP

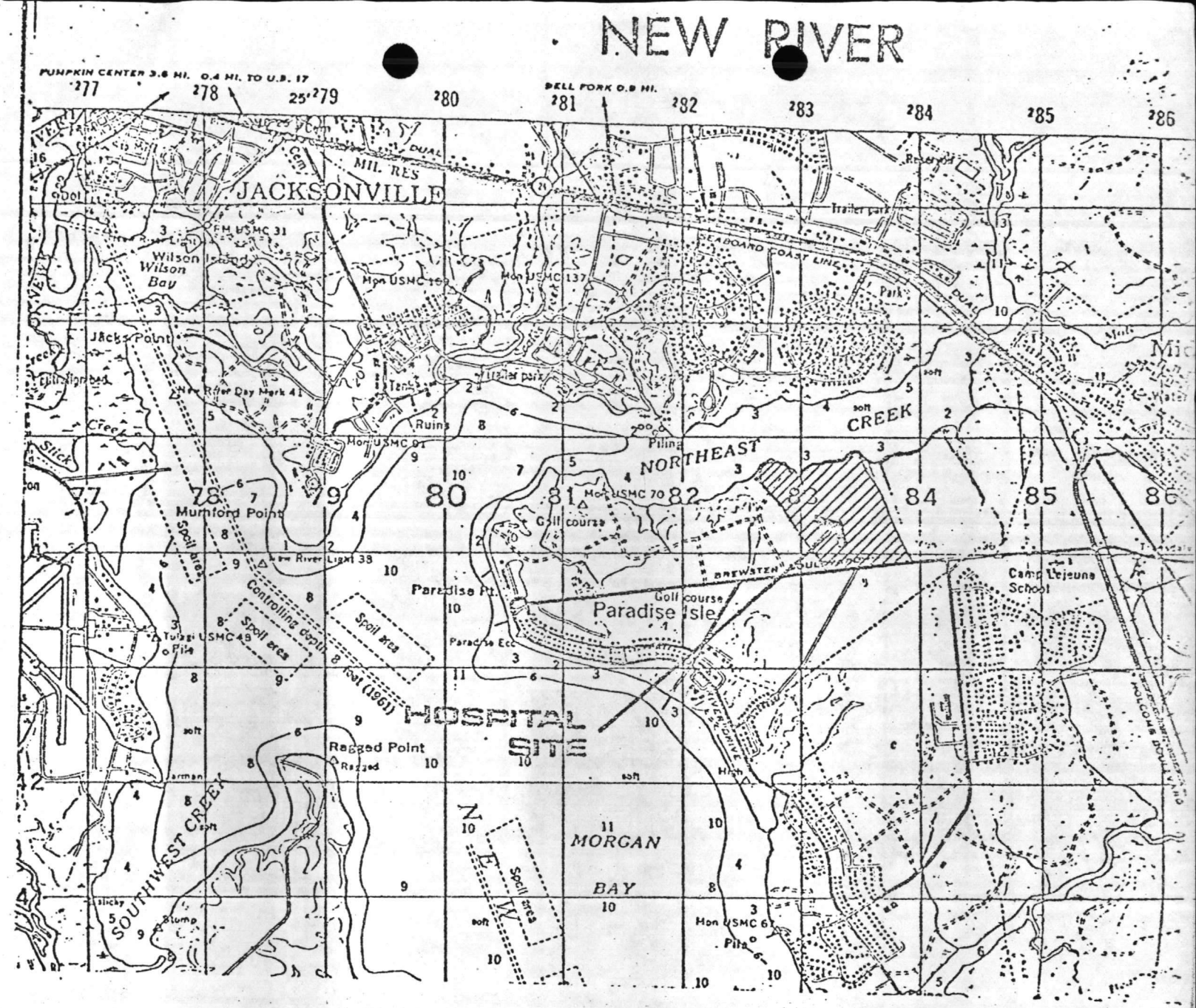

VICINITY MAP

CS-1

NAVFAC DWG. NO. 4043468 LANTDIV DWG. NO. 143468

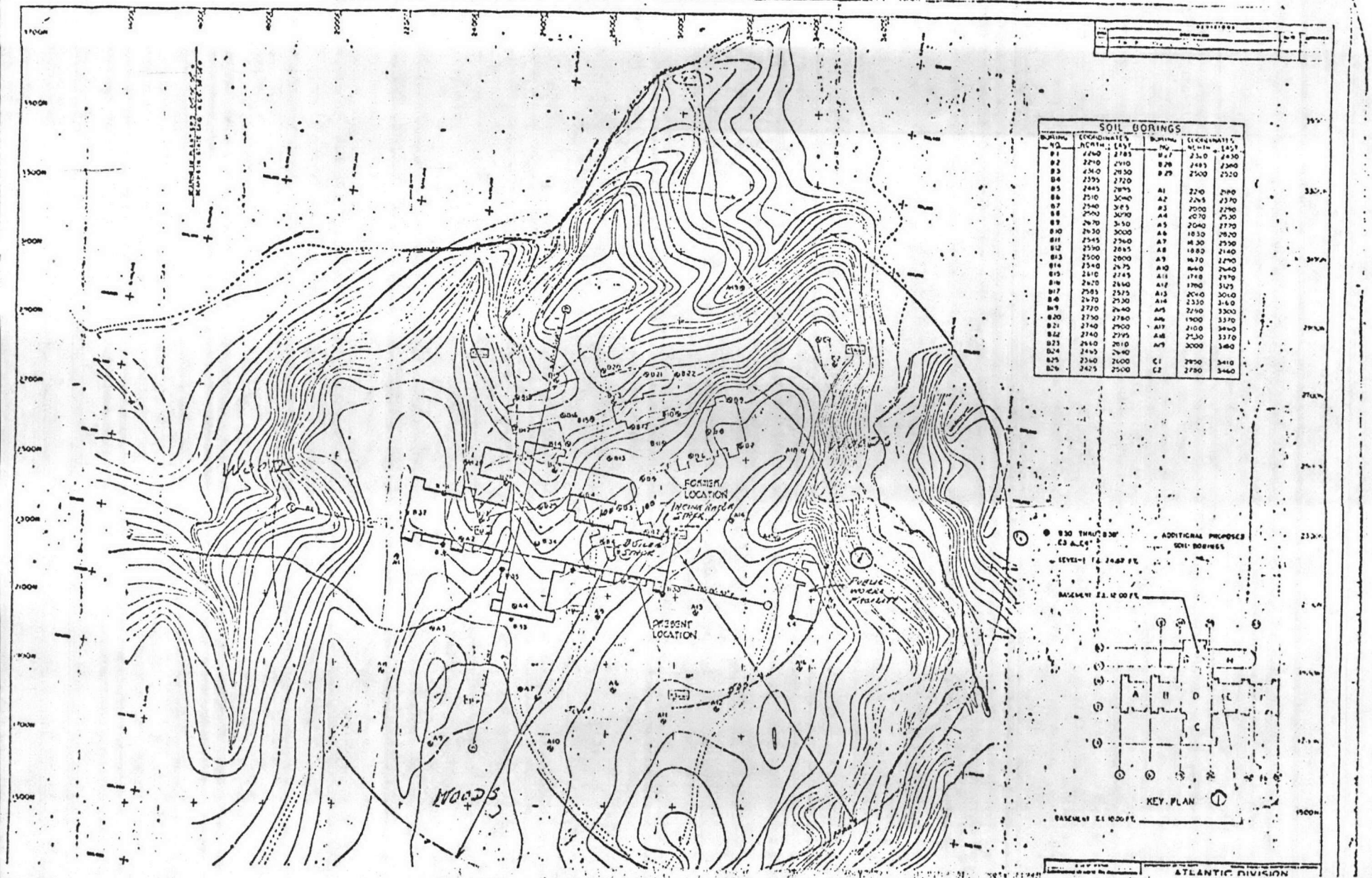

SOIL BORINGS

BORING NO.	COORDINATES NORTH	COORDINATES EAST	BORING NO.	COORDINATES NORTH	COORDINATES EAST
B1	2260	2785	B27	2360	2430
B2	2210	2910	B28	2485	2380
B3	2340	2930	B29	2500	2520
B4	2395	2720			
B5	2445	2895	A1	2210	2980
B6	2510	3040	A2	2265	2370
B7	2540	3085	A3	2000	2290
B8	2590	3010	A4	2070	2530
B9	2670	3150	A5	2040	2770
B10	2630	3000	A6	1830	2820
B11	2545	2940	A7	1830	2550
B12	2590	2865	A8	1880	2140
B13	2500	2800	A9	1670	2290
B14	2540	2675	A10	1640	2640
B15	2610	2745	A11	1710	2970
B16	2620	2640	A12	1780	3125
B17	2585	2575	A13	2040	3040
B18	2670	2530	A14	2330	3160
B19	2720	2640	A15	2290	3300
B20	2750	2780	A16	1900	3370
B21	2740	2900	A17	2100	3410
B22	2740	2995	A18	2530	3370
B23	2640	2810	A19	3000	3480
B24	2445	2640			
B25	2340	2600	C1	2950	3410
B26	2425	2500	C2	2780	3460

COMBUSTION SYSTEMS
8625 S.W. Tualatin Rd.
Tualatin, Oregon 97062
503/638-8475

March 4, 1980

CARDINAL CONTRACTING CO., INC.
P.O. Box 8408
Camp LeJeune, N.C. 28542

668

Attn: Bernard Manning
Office Engineer

RE: Camp LeJeune Hospital
Incinerator

Gentlemen:

The incinerator offered, our Model CAI-100, can handle or burn 375 lbs. of type IV waste during a six (6) hour period. It would have to be loaded or charged 3 - 4 times during this period. Each loading or charge would be on the order of 100 lbs. plus. The maximum charging capacity of the Model CAI-100 is 1 cubic yard. Normally, it would take a couple of hours to burn down a charge of the maximum volume.

Emissions

The CAI-100 operates with little visible emissions well under 20% capacity. The grain loading corrected to 12% CO_2 is under 0.1 grain per cubic foot of flue gas (std. conditions).

"UL" Label

The controls and valves used to operate the incinerator's auxiliary burner will carry the "UL" label. The exhaust stack or chimney will be a Van Packer type "HT" stack which also carries the "UL" label.

The incinerator as such would not have a "UL" label. In the past, reviewing agencies have been satisfied that the controls, gas valves, motors, wiring components, stacks, etc., by carrying the "UL" label would be fully adequate. We know of no incinerator as such, that carries the "UL" label by itself.

March 4, 1980

We shall await comment on the incinerator, and hopefully approval, so we can enter the unit into our production schedule.

Very truly yours,

ADVANCED COMBUSTION SYSTEMS

E. J. O'Gieblyn

EJO:so

INDUSTRIAL/COMMERCIAL INCINERATORS

ADVANCED COMBUSTION SYSTEMS
8625 S.W. Tualatin Rd.
Tualatin, Oregon 97062
503/638-8475

MODEL NO. CAI-100 FOR GENERAL WASTE SERVICE

FOR 1, 2 TYPE WASTE

INCINERATION RATED CAPACITY:

Type "0" Waste	67	Lbs./Hr.
Type "1" Waste	100	Lbs./Hr.
Type "2" Waste	125	Lbs./Hr.
Type "4" Waste	60+	Lbs./Hr.
Other		Lbs./Hr.

AUX. BURNERS: (GAS OR OIL)

Primary Chamber:	
1 Ea. @	400,000 BTU/Hr. Ea.
Afterburner:	
1 Ea. @	400,000 BTU/Hr. Ea.

INCINERATOR BASIC DIMENSIONS

Primary Chamber:

Shell Diameter	46"	O.D.
Burning Chamber	38"	Dia.
Length of Burn Chamber	56"	
Charge Capacity (Max.)	1	Cu. Yd.
Chamber Volume	37	Cu. Ft.
Hearth Area	14.7	Sq. Ft.
1900° F. Insulation	1"	
Lining (Refractory)	3"	

Exhaust Stack:

Stack Casing	18"	Dia.
Casing Thickness	12	Ga.
Stack I.D.	12"	Dia.
Stack Length	12'-0"	Ft.
Thickness of Lining	3"	
Total Height from Slab	~~18'-5"~~	Ft.
Stack Weight	120	Lbs.

UTILITY REQUIREMENTS

Electrical Service

110 Volts	1 Phase	60 Hz.
20 Amp	3 Wire	
1 HP		

Weights:

Basic Unit	4500	Lbs.
Stack Weight	1200	Lbs.
Total	5700	Lbs.

Fuel:

	Natural Gas:	#2 Oil
Max. Firing	800 CFH:	5.5 GPH
Average with Temperature Control on Afterburner	500 CFH:	3.5 GPH

Specify Line Pressure or if L.P. is to be used.

Propane Vapor @ 11" H_2O

CAI-100

- ELECT IGNITION REQ'D
- NAME PLATE W/ REQ'D INFO.
- PAINT FINISH

N-62470-77-C-7525

"It is hereby certified that the (~~material~~) (equipment) shown and marked in this submittal is that, approved/proposed to be incorporated into Contract Number _____, is in compliance with the contract drawings and specifications, and can be installed in the allocated spaces, and is (~~approved for use~~) (submitted for Government approval).

CARDINAL CONTRACTING CO.

Authorized Reviewer _____ Date 1-21-80.

Signature CQC Rep _____ Date 3-20-80."

ITEM	DESCRIPTION
1	DESTRUCTOR BODY. CASING 7/16" MS PLATE HP INSULATION 1". 13 CCFT BLK LINING 4"(MIN) 26 CCFT. CASTA
2	LOAD DOOR W/ASBESTOES ROPE SEAL".
3	BALL BEARING HINGES
4	MANUAL DOOR LATCH
5	VIEW PORT W/ PYREX LENS
6	PRIMARY AIR BLOWER
7	SLIDE GATE DAMPER
8	PRIMARY AIR DISTRIBUTION DUC
9	PRIMARY AIR SUPPLY MANIFOL
10	LIQUID RETENTION DAM
11	CONTROL PANEL, TEMP CONTROL S
12	AFTERBURNER SECTION
13	SECONDARY BURNER
14	SECONDARY AIR BLOWER
15	SEC. AIR SLIDE DAMP
16	OPTIONAL "HI-LOW" TE CONTR
17	YAN PACKER STACK ADAPTOR
18	YAN PACKER STACK SECTIONS 4'
19	TEST PORT SECTION FOR Y-P'S ST
20	SPARK ARRESTOR (~~[illegible]~~) MK"MS" MILD STEEL-12 GA 2 MK"SS" T 309 16 GA 2
21	PRIMARY BURNER

UTILITY REQUIREMENTS:

WEIGHT OF UNIT. 5700 LBS.

NAT'L GAS (TYPE 0,1,2,3,4 WASTE

PRIMARY BURNER: 400 FT

SECONDARY BURNER: 400 FT

TOTAL 800 FT

~~GAS AT 15 LBS/IN²~~ (OR

ELECTRICAL

TOTAL HP = 1 HP

VOLTAGE 115-230V 1 PH 60

15 AMP V.

NOTE: BURNERS ~~AVAILABLE~~ TO OPERATE ON ~~DIESEL~~ OR L

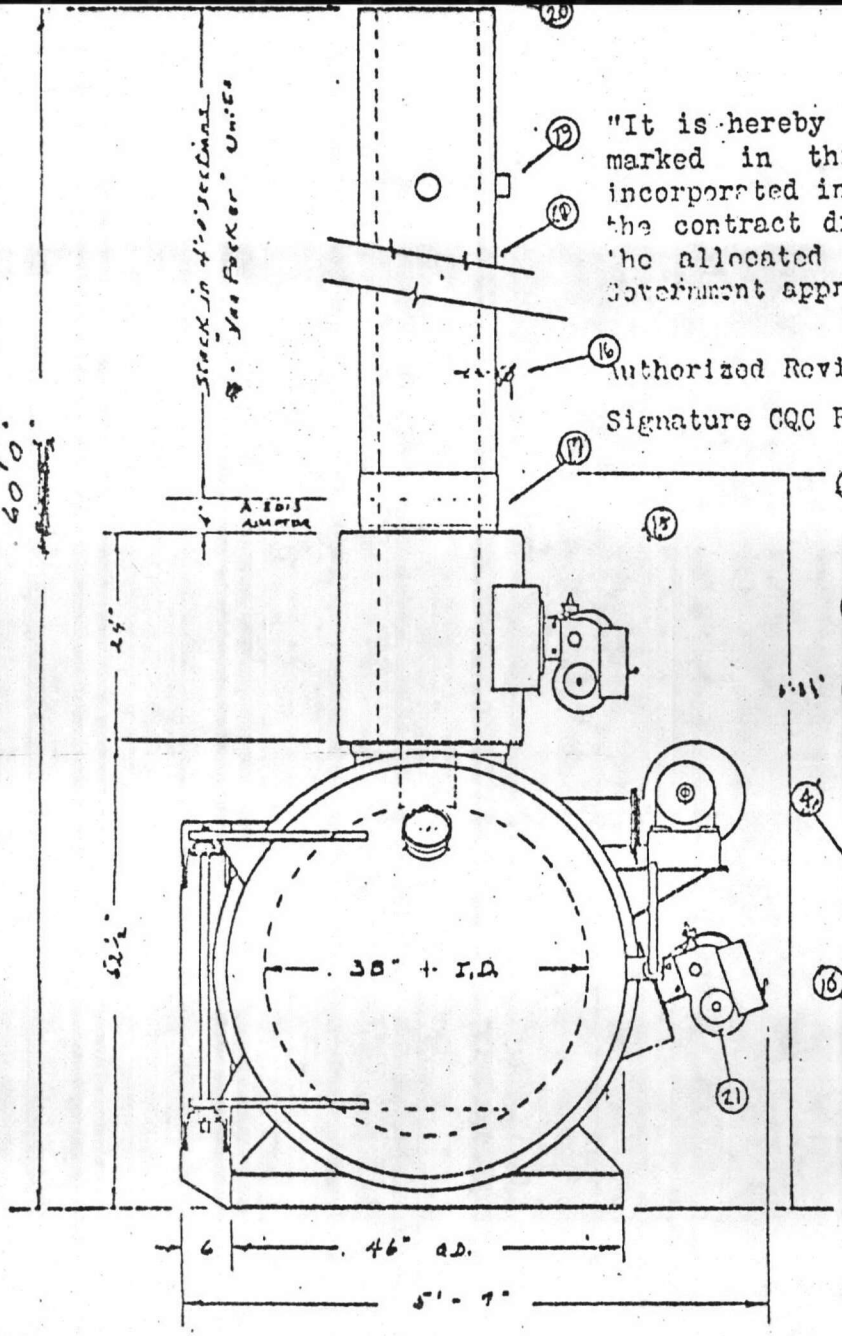

Front End Elevation

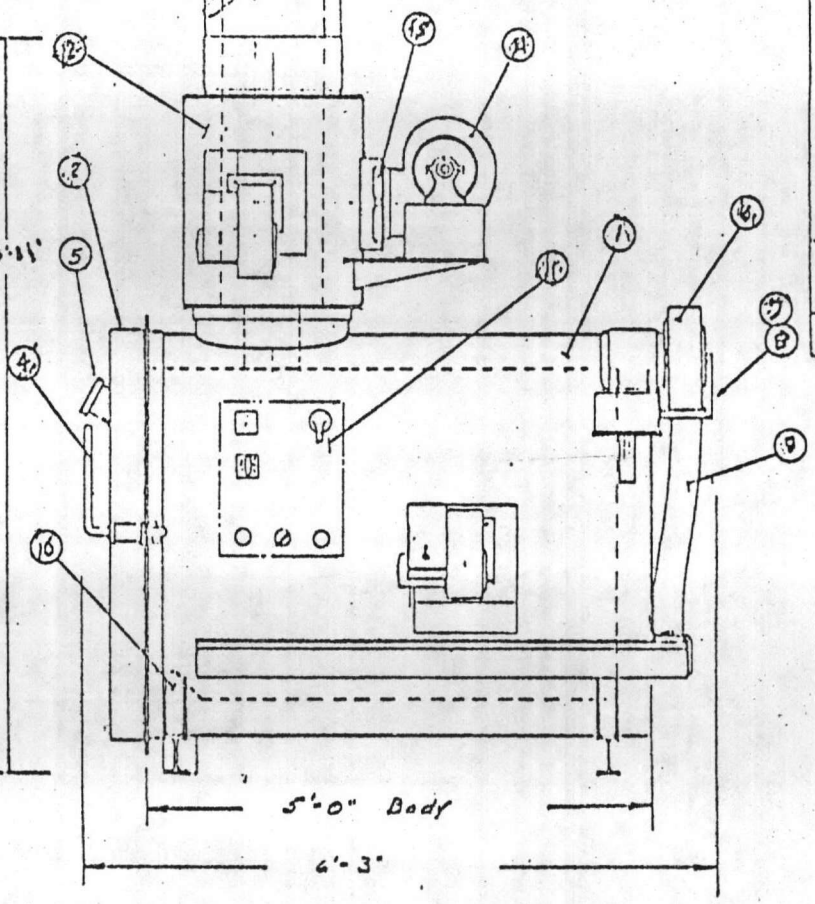

Right Side Elevation

SEE DWG C-1017 FOR STACK ARRA

SEE DWG A-2031 FOR REDUCTION

ADVANCED COMBUSTION SYSTEMS
1075 N. INTERSTATE
PORTLAND, OREGON 97227

SCALE: 1"=1'-0" | APPROVED BY: | DRAWN BY: R

DATE: 6 Oct 75 | DATE ISSUED:

General Arrangement CAI-10
(Stack at Front End)

C-122

J-80-3
J-120-3] Spark-ignited pilot, 100% shut-off
Electronic flame safety

Weather hood available for outdoor installation.

Models J-40-DS, J-80-DS

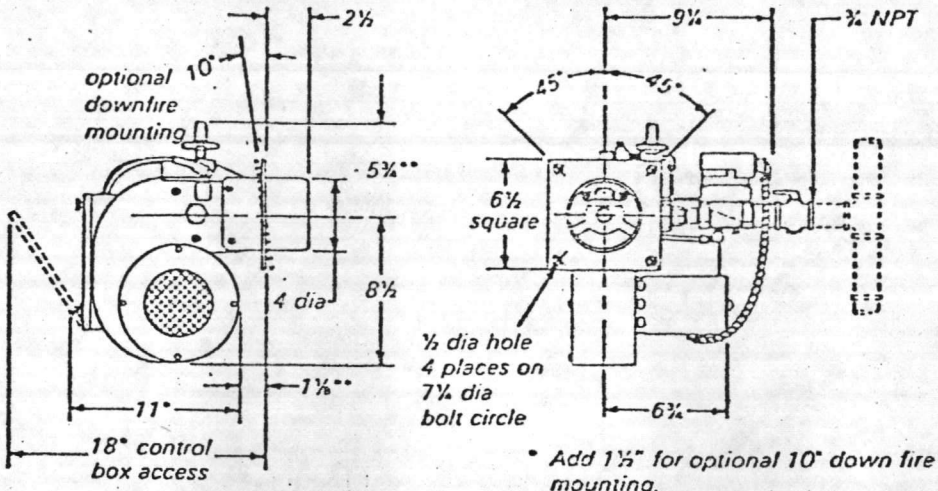

* Add 1½" for optional 10° down fire mounting.
** Add ½" for optional 10° down fire mounting.

Models J-80-3, J-120-3

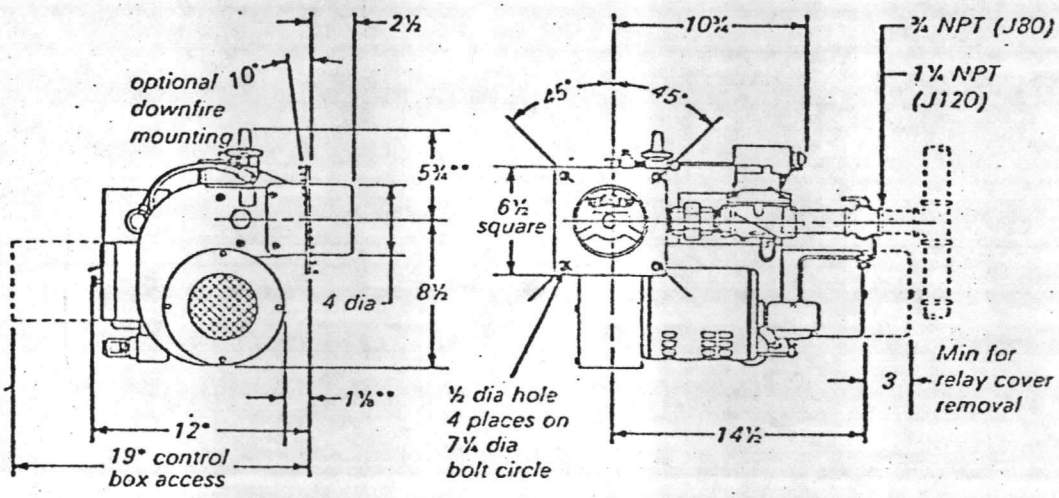

* Add 1½" for optional 10° down fire mounting.
** Add ½" for optional 10° down fire mounting.

Specifications

Model	Natural Gas Capacities BTU/HR Maximum	Natural Gas Capacities BTU/HR Minimum	Natural Gas Gas Pressure Required	LPG Capacities BTU/HR Maximum	LPG Capacities BTU/HR Minimum	LPG Gas Pressure Required
J-40-DS	400,000	50,000	5" w.c.	400,000	50,000	11" w.c.
J-80-DS J-80-3	800,000	50,000	5" w.c.	800,000	50,000	11" w.c.
J-120-3	1,125,000 1,200,000	100,000	5" w.c. 6" w.c.	1,200,000	100,000	11" w.c.

Maximum gas pressure: 15" (w.c. inlet)
Electrical supply: 120 Volts, 60 Hz. 1 Ph.
Current draw J-40, J-80: 3.0 Amperes Maximum Running
Current draw J-120: 4.5 Amperes Maximum Running

Shipped as Natural gas models. Kit available for field conversion to LPG.

"It is hereby certified that the (equipment) shown and marked in this (submittal) is that approved/proposed to be incorporated into Contract Number , is in compliance with the contract drawings and specifications, and can be installed in the allocated space, and is intended for use) (submitted for Government approval)

CARDINAL CONTRACTING CO.

Authorized Reviewer _____ Date 1-21-80

Signature CQC Rep _____ Date 3-20-80

Midco
Metal Products Company
2719 N. Greenview Avenue
Chicago, Illinois 60614
312 549-3900

6280/4

NATURAL RESOURCES AND ENVIRONMENTAL AFFAIRS DIVISION
BASE MAINTENANCE DEPARTMENT
MARINE CORPS BASE
CAMP LEJEUNE, NORTH CAROLINA 28542

18 Aug 81

From: Director, NREA Division
To: Twylan
Subj:

1. Make copy for Utilities

done
18 Aug 81

ROUTING SLIP

AUG 1 4 1981

	ACTION	INFO	INITIAL
BMO		✓	M
ABMO		✓	
ADMIN		✓	
ENVIRON AFF	✓		S FJW
F&A BRANCH			
MAINT NCO			
M&R			
OPNS			
PROP			
TELE			
UMACS			
UTIL			
SECRETARY			

COMMENTS:

ASSISTANT CHIEF OF STAFF, FACILITIES
HEADQUARTERS, MARINE CORPS BASE

Date 13 Aug 87

To: (Base Maintenance Officer)
Public Works Officer
Motor Transport Officer

Subj: Encl. Ltr. of 20 July 87

1. Forwarded, approved.

2. Forwarded, for ~~information~~/action.

3. Forwarded, for comment and return endorsement hereon.

4. Forwarded, requesting cost estimate.

5. Forwarded, requesting light/air conditioning survey.

6. Forwarded, for your files.

J. G. Fitzgerald
J. G. FITZGERALD
By direction

MCBCL 11000/30

North Carolina Department of Natural Resources & Community Development
James B. Hunt, Jr., Governor
Howard N. Lee, Secretary
DIVISION OF ENVIRONMENTAL MANAGEMENT

July 20, 1981

D.B. Barker
Major General, U.S. Marine Corps
Commanding General
Marine Corps Base
Camp Lejeune, NC 28542

Subject: Application for Permit Renewal
Permit 3822
Marine Corps Base
Camp Lejeune, NC
Onslow County

Dear General Barker:

This will acknowledge receipt of your application for renewal of Permit 3822 for the Marine Corps Base, Camp Lejeune, North Carolina, Onslow County.

Your application will be processed by this office and you will be advised of the results of our review as quickly as possible.

Sincerely,

Chl Wakild

Charles Wakild
Regional Supervisor

cc: WRO
Central Files

Wilmington Regional Office 7225 Wrightsville Avenue, Wilmington, N. C. 28403 Telephone 919/256-4161

DIVISION OF ENVIRONMENTAL MANAGEMENT

July 20, 1981

D.E. Parker
Major General, U.S. Marine Corps
Commanding General
Marine Corps Base
Camp Lejeune, NC 28542

Subject: Application for Permit Renewal
Permit 3822
Marine Corps Base
Camp Lejeune, NC
Onslow County

Dear General Parker:

This will acknowledge receipt of your application for renewal of Permit 3822 for the Marine Corps Base, Camp Lejeune, North Carolina, Onslow County.

Your application will be processed by this office and you will be advised of the results of our review as quickly as possible.

Sincerely,

Charles Wahlfd
Regional Supervisor

cc: LRO
Central Files

North Carolina Department of Natural
Resources & Community Development
7225 Wrightsville Ave. Wilmington, North Carolina 28403

FAYETTEVILLE, NC
PM
22 JUL
1981

WILMINGTON
JUL 22 '81
N.C.

U.S. POSTAGE
.18

D.B. Barker
Major General, U.S. Marine Corps
Commanding General
Marine Corps Base
Camp Lejeune, NC 28542

2503 Cavendish Dr.
Alexandria, VA 22308

Fac for action

DIRECTORY SERVICE
MARINE CORPS BASE
CAMP LEJEUNE, N. C.

REC'D JUL 23 1981

FWD 810723

CLERK 341

North Carolina Department of Natural Resources & Community Development
James B. Hunt, Jr., Governor
Howard N. Lee, Secretary

June 27, 1978

Permit
#5 Boiler

Mr. F. W. Tief, Brigadier General
United States Marine Corps
Marine Corps Base
Camp Lejeune, North Carolina 28542

Dear Mr. Tief:

Subject: Permit No. 3822
Marine Corps Base
Camp Lejeune, North Carolina

In accordance with your application received June 2, 1978, we are forwarding herewith Permit No. 3822 to Marine Corps Base, Camp Lejeune, North Carolina for the construction and operation of a No. 6 oil-fired boiler (121 x 10^6 BTU per hour heat input) and appurtenances, and for the discharge of the associated stack gases at its facility located at Camp Lejeune, North Carolina, Onslow County.

This Permit shall be effective from the date of its issuance until July 1, 1981, is nontransferable to future owners and operators, and shall be subject to the conditions and limitations as specified therein.

Sincerely,

A. F. McRorie

A. F. McRorie, Director
Division of Environmental Management

HDL:el

Enclosure

NORTH CAROLINA

ENVIRONMENTAL MANAGEMENT COMMISSION

DEPARTMENT OF NATURAL RESOURCES & COMMUNITY DEVELOPMENT

Raleigh

P E R M I T

For the Discharge of Air Contaminants Into the Atmosphere

In accordance with the provisions of Article 21B of Chapter 143, General Statutes of North Carolina as amended, and other applicable Laws, Rules and Regulations,

PERMISSION IS HEREBY GRANTED TO

Marine Corps Base
Camp Lejeune, North Carolina

FOR THE

construction and operation of a No. 6 oil-fired boiler (121 x 10^6 BTU per hour heat input) and appurtenances, and for the discharge of the associated stack gases at its facility located at Camp Lejeune, North Carolina, Onslow County,

in accordance with the application received June 2, 1978, and in conformity with the plans, specifications, and other supporting data, all of which are filed with the Department of Natural Resources & Community Development and are incorporated as part of this Permit.

This Permit shall be effective from the date of its issuance until July 1, 1981, is nontransferable to future owners and operators, and shall be subject to the following specified conditions and limitations:

1. This Permit shall become voidable unless the boiler is constructed in accordance with the approved plans, specifications and other supporting data and is completed and placed in operation on or before April 30, 1979, or as this date may be amended.

2. The boiler shall be properly operated and maintained at all times in such a manner as to effect an overall reduction in air pollution in keeping with the application and otherwise to reduce air contamination to the extent necessary to comply with applicable Environmental Management Commission Regulations, including 15 NCAC 2D .0503, .0516, and .0521 and in no case shall the sulfur dioxide emissions from the boiler exceed 2.3 pounds per million BTU input.

3. The boiler shall be evaluated for compliance with Environmental Management Commission Regulation(s) 15 NCAC 2D .0521 by the Division of Environmental Management, at the aforementioned location, within 90 days of the operational date. This Permit shall become voidable, with proper notice to the company, if the results of the evaluation indicate that the boiler does not meet applicable laws, rules, and regulations.

4. A violation of any term or condition of this Permit shall subject the Permittee to enforcement procedures contained in North Carolina General Statutes 143-215.114, including assessment of civil penalties.

Permit issued this the 27th day of June, 1978.

NORTH CAROLINA ENVIRONMENTAL MANAGEMENT COMMISSION

A. F. McRorie

A. F. McRorie, Director
Division of Environmental Management
By Authority of the Secretary of the Department
of Natural Resources & Community Development

NORTH CAROLINA

ENVIRONMENTAL MANAGEMENT COMMISSION

RALEIGH

APPLICATION FOR

A "PERMIT"

TO CONSTRUCT AND OPERATE AIR

POLLUTION ABATEMENT FACILITIES AND/OR EMISSION SOURCES

Filed By: Brigadier General F. W. Tief
(Name)

Marine Corps Base
(Address)

Camp Lejeune, North Carolina

AQ-22 Rev. 11/73

APPLICATION FOR A "PERMIT"
To Construct and Operate Air Pollution Abatement Facilities and/or Emission Sources
Three Copies to be Submitted
Fourth Copy Should be Retained by Applicant

Date: 14 APR 1978

In accordance with the provisions of Article 21 of Chapter 143, General Statutes of North Carolina as amended, application is hereby made by Marine Corps Base, Camp Lejeune
(Name of Company, Establishment, Town, Etc.) (Include Division or Plant Name in Addition to Parent Company if Applicable) in the County of Onslow at Jacksonville, North Carolina (Street and City or Town Address of Plant or Facility) for issuance of a "Permit" to construct and operate air pollution abatement facilities and/or emissions sources at above location as specified in the accompanying drawings, specifications, and other pertinent data:

1. Nature of Operation Conducted at the Above Facility:
   Military operations

2. Description of Process(es) Whose Emission(s) is/are to be Controlled by the Facility or Source(s) Which is/are to be Constructed or Altered. (Complete Section I)

   Boiler, No. 6 Fuel Oil

3. Furnish Type and Narrative Description of Proposed Control Device(s).(Complete Appropriate Supplemental Data Sheets for Control Device to be Installed and/or Operated. Include Make and Model Number of Control Device(s) and Number of Identical Units).

   No. 6 Oil fired, no control device.

4.

Contaminant Emitted:	Weight Rate of Emissions (lb/hr): Without Control Device	With Control Device	Control Efficiency (%): Without Control Device	With Control Device
SO^2 and Dust	Unknown	Negligible	0	99%

5. Name and Address of Engineering Firm that Prepared Plans:

6. Ultimate Disposition of Collected Pollutants:
   None

7. Date on Which Facilities are to be Completed and in Operation:
   April, 19 79

8. Indicate Period of Time for Which Facilities are Estimated to be Adequate: 20 Years

9. Estimate Cost of Air Pollution Control Device $ 0

10. Hours Facility is Operated Per Year: 8,760

Name: Brigadier General F. W. Tief
(Responsible Individual of Company Purchasing/Operating Facility...PLEASE PRINT)

Mailing Address: Marine Corps Base
Camp Lejeune,
North Carolina 28542

Signature and Title: FW Tief
F. W. TIEF
Commanding General

Telephone Number: 451-5003

AQ-22 Rev. 11/73

I. GENERAL DATA FOR PROCESSES

**Attach detailed process engineering drawings, equipment drawings and flow diagrams for the process(es) or source(s) being constructed or altered.*

Name of Process: _____

Total Weight of Materials Entering this Process: _____ lb/hr or ton/hr

Volume and Temperature of Air Flow Entering Control Device: _____ CFM @ _____ °F

Volume and Temperature of Effluent at Discharge Point to Atmosphere: _____ CFM @ _____ °F

Pollutant(s) to be Controlled: _____

Height of Process Stack or Vent Above Ground Level _____ ft. Inside area of Stack _____ ft^2.

Particulate Emission Rate (Before Control) _____ lb/hr

Particle Size Distribution: 0-5μ_____%, 5-10μ_____%, 10-20μ_____%, 20-30μ_____%, 30-40μ_____%, 40-50μ_____%, >50μ_____%

Gaseous Emission(s): Name (Chemical Formula) μg/m^3, PPM or lb/hr

II. SUPPLEMENTARY DATA FOR INCINERATORS (Including Conical Incinerators)

Circle Type of Waste or Indicate Composition: Type 0 Type I Type II Type III Type IV

Combustible: _____% Non-Combustible: _____% Moisture: _____% Heat Value: _____BTU/lb

Total Waste Generated Per Day: _____ lb.

Hours Incinerator will be Operated: _____ hrs/day

Design Capacity for Above Waste: _____ lbs/hr

Manufacturer and Model Number; Approximate Cost: _____

Primary Chamber Volume: _____ $ft.^3$

Secondary Chamber Volume: _____ $ft.^3$

Air Requirements: Total Excess Air ____% Draft: Natural ____ Induced ____ Other ____

Overfire Air: ____cfm Underfire Air: ____cfm

Is there an Electronically Controlled, Exhaust Gas Temperature Modulated, Damper Installed on the Conical Incinerator for: Overfire Air Supply____, Underfire Air Supply____, Dome____Temperature Set Point____°F

Flame Port Temperature: _____ °F Secondary Chamber Temperature: _____ °F

Is there a Continuous Exhaust Gas Temperature Recorder? Yes____ No____

Stack:
Inside Area ____$ft.^2$ Height ____ft. Gas Velocity ____ft/sec Temperature ____°F Fan Capacity ____cfm Stack Lined? _____

Is there a Wet Scrubber?

Yes ____ No ____ Flow Rate of H_2O into Scrubber ____gal/min Temperature Before Scrubber ____°F

Aux. Fuel: Oil _____ Gas _____ Other _____ Burner Rating: Primary Chamber _____BTU/hr Secondary Chamber _____BTU/hr Stack _____BTU/hr

Primary Burner: Is there a Preheat Timer? Yes ____ No ____ Preheating Time: _____min.

Secondary Burner or Afterburner: Is there a Timer? Yes ____ No ____ Length of Time Burner is Operated _____min.

Is the Timer Reset by Charging Door? Yes ____ No ____ Other Mode of Burner Control _____

Type of Feed: Manual _____ Automatic _____ If Automatic, Describe _____

Distance from Incinerator to Nearest Structure(s) in which People Live and/or Work._____ft.

Signature: _____ Title: _____

III. SUPPLEMENTARY DATA FOR FUEL BURNING SOURCES

**Attach detailed dimensioned drawing or sketch showing internal features of dryers, wood or coal fired boilers, and recovery boilers.*

Type of Fuel Burning Source Boiler Stack Height Above Ground Level 100 ft. Inside Area of Stack 10.8 ft^2

Make and Model Number 10719 Volume of Furnace 1700 ft^3

Specify Actual Amount of Each Fuel Used in Above Source (s):

Coal ____ lb/hr; Oil Grade 6 Amount 840 gal/hr, at 144,000 BTU/gal and ____ lb/gal or ____ lb/hr

Wood ____ lb/hr; Natural Gas ____ SCF/hr, at ____ BTU/SCF; Other _____
(Specify type, amount and heating value)

Specify Maximum Rating for Each Fuel Burning Source:

Coal ____ Oil 840 g/hr Wood ____ Natural Gas ____ Other _____

Maximum Sulfur Content of Fuel 2.0 % Specify Standby Fuel None Maximum % Sulfur ____

Type of Solid Fuel Burning Equipment Used: Hand Fired ___ Spreader Stoker ___ Underfeed Stoker ___ Chain Grate ___
DNA
Traveling Grate ___ Pulverizer ___ Cyclone Furnace ___ Other (Specify) _____

Ash Content of Fuel: Specify Method and Schedule of Tube Cleaning, if Applicable:

Coal ____ % Wood ____ % Other ____ % Lancing _____ Tube Blowing _____ Schedule _____

Emission Control Equipment (Describe in Detail in Sections IV and V)

Collection Device: Wet ___ Dry ___ Steam Injection ___ Air Injection ___ Is Collected Flyash Reinjected? ____
Draft on Boiler (Natural ____ Induced X) ____ cfm at ____ °F
Total Number of Fuel Burning Sources Within Property Boundaries: 5

Maximum Capacity Rating, by Type, for All Fuel Burning Units Excluding that Itemized Above: (Total Like Units) 4 Units

Coal 9111 lb/hr Wood ___ lb/hr Oil ___ gal/hr Natural Gas ___ SCF/hr

IV. SUPPLEMENTARY DATA FOR WET COLLECTION DEVICES

**Attach detailed engineering drawings of the control device and particle size versus removal efficiency curves.*

Liquid Scrubbing Medium and Additives: _____

Total Liquid Injection Rate (Include Recirculated and Make-up Rates) ____ gal/min or gal/1000 ft^3

Operating Pressure Drop Across Device ___ in H_2O

ANSWER FOLLOWING QUESTIONS FOR SPECIFIC DEVICE:

VENTURI SCRUBBER: Inlet Area ___ in^2 Throat Area ___ in^2 Throat Velocity ___ ft/sec

GRAVITY SPRAY CHAMBER: Number of Nozzles ___ Liquid Droplet Size ___ u Co-Current ___ Countercurrent ___

WET CYCLONE:
Body Diameter ___ in Length _____ in
Inlet Area _____ in^2 Number of Nozzles _____
Outlet Area _____ in^2

PACKED TOWER OR PLATE TOWER:
Cross-Sectional Area _____ ft^2 Type of Plate _____
Length _____ ft Depth of Packing _____ ft
Number of Plates _____ Type of Packing _____

OTHER WET COLLECTION DEVICES: GIVE COMPLETE DESCRIPTION INCLUDING DESIGN PARAMETERS AND DETAILED ENGINEERING DRAWINGS.

Signature: _____ Title: _____

V. SUPPLEMENTARY DATA FOR DRY COLLECTION DEVICES

**Attach detailed engineering drawings of the control device and particle size versus removal efficiency curves.*

BAGHOUSES: Cloth Area _____ ft^2

Bag Material _____

Number of Compartments _____

Pressure - Drop Total _____ in H_2O

Method of Cleaning _____

Air-to-Cloth Ratio _____ ft/min

Time Between Cleaning _____ mins, hrs

ELECTROSTATIC PRECIPITATORS:

GENERAL:

Effective Area of Grounded Collector Plates _____ ft^2

Number of Compartments or Chambers _____ Number of Cells per Compartment _____

Electrical Field Gradient at the Discharge or Emitting Electrodes _____ KV/in

Average Electrical Field Gradient at the the Grounded Collecting Electrodes _____ KV/in

Fields of Treatment _____ Potential Applied to Emitting Wires _____ KV

SINGLE STAGE TYPE:

Distance Between Emitting Wires and Collecting Plates _____ in.

Number of Isolatable Bus Sections _____ Corona Power _____ Watts/1000 cfm

TWO STAGE TYPE:

Distance Between First Stage Emitting Electrodes and Field Receiver Electrodes (Ground) _____ in

Potential Applied to Second Stage Emitting Plates _____ KV

Distance Between Second Stage Emitting Plates and Grounded Collection Plates _____ in

CYCLONES/MULTICYCLONES:

Simple Cyclone

Diameter _____ in

Inlet Dimensions _____

Outlet Dimensions _____

Pressure Drop _____ in H_2O

Number of Cyclones _____

Multicyclone

Diameter _____ in

Inlet Dimensions of Individual Cyclone _____

Outlet Dimensions of Individual Cyclone _____

Pressure Drop _____ in H_2O

Number of Cyclones _____

OTHER DRY COLLECTION DEVICES: GIVE COMPLETE DETAILED ENGINEERING DESCRIPTION AND DRAWINGS.

Signature: _____

Title: _____

VI. AREA DIAGRAM

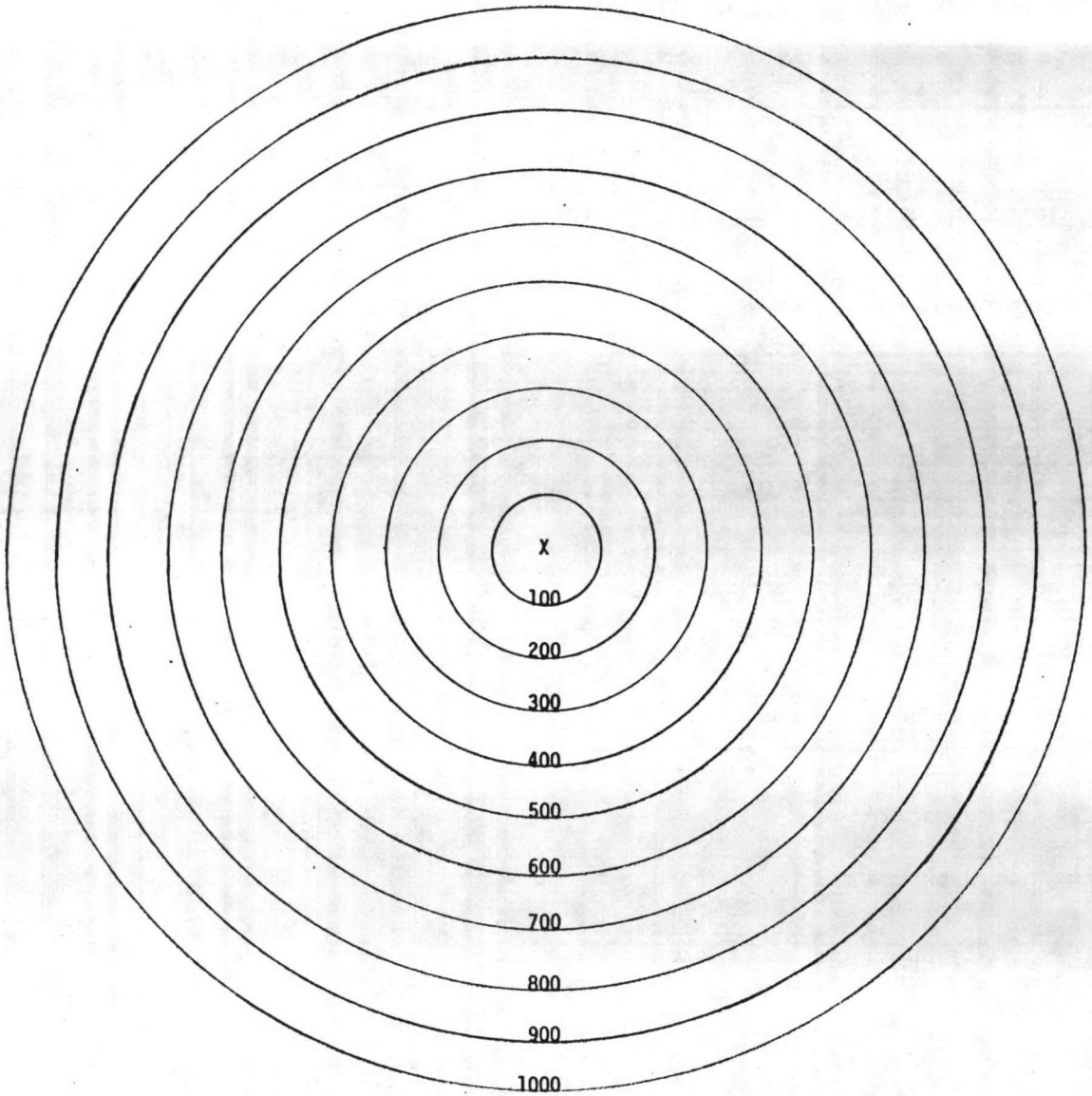

Owner Marine Corps Base, Camp Lejeune

Location Jacksonville, N. C.
(Give Street Address)

INSTRUCTIONS:

1. Show all surrounding buildings and roads within 1000 feet of subject equipment which is located at center of circles.

2. Indicate location and type of building by the use of small numbered circles with the description below.

3. Show roads as lines representing the road edges. Indicate street names and highway numbers.

4. Show wooded or cleared areas by approximate boundary lines and the words "woods", "cleared", "cornfield", etc.

5. Indicate direction of north by arrow.

CODE	DESCRIPTION
①	
②	
③	
④	
⑤	
⑥	
⑦	
⑧	
⑨	
⑩	

EXAMPLE ① Church
② Residence

X Indicates location of equipment.

MAIN/DDS/mac
6280/4

JUN 1 2 1981

From: Commanding General
To: Commanding Officer, Naval Regional Medical Center

Subj: Registration and Permitting of Boilers and Incinerators

Ref: (a) CDR LANTNAVFACENGCOM ltr 114:EAE 6280 of 5 Sep 1980

Encl: (1) Application for a "Permit" to Construct and Operate Air Pollution Abatement Facilities and/or Emission Sources

1. Reference (a) advised that enclosure (1) be submitted to the North Carolina Environmental Management Commission. Reference (a) also provided guidance on the proper official to sign the application.

2. This Command has determined that the Commander, Naval Regional Medical Center (NRMC), should sign and submit enclosure (1). The cover letter should advise that the subject incinerator has been previously inspected by State officials.

3. It is recommended the Commander, Atlantic Division, be requested to add the subject incinerator to the Navy Air Pollution Source Inventory System (NAPSIS). As addressed in reference (a), the NAPSIS should be revised to identify separately the pollution sources located aboard NRMC.

4. Point of contact is Mr. J. I. Wooten, Natural Resources and Environmental Affairs Division, Base Maintenance Department, extension 5003.

F. H. MOUNT
By direction

MAIN/DDS/th
6280/4
6 Nov 1980

Director, Natural Resources and Environmental Affairs Division

Director, Operations Division

Via: Base Maintenance Officer

Registration and Permitting of all Operating Incinerators

Ref: (a) Clean Air Act (PL 95-95); State Implementing Regulations
(b) CDR LANTNAVFACENGCOM ltr 114:EAE 6280 of 5 Sep 1980

1. Reference (a) requires that all existing incinerators have an operating permit. Reference (b) identifies two existing incinerators: one at Bldg PT-38 and one at Bldg 1200 which are not permitted, as required by reference (a). If these incinerators are no longer needed, they should be decommissioned, as required for compliance with reference (a).

2. Please advise this office when this work has been completed so that these items can be deleted from state registration listing of air pollution sources.

3. Point of contact is Mr. D. Sharpe, extensions 2083 or 2195.

J. I. WOOTEN

NATURAL RESOURCES AND ENVIRONMENTAL AFFAIRS DIVISION
Base Maintenance Department
Marine Corps Base
Camp Lejeune, North Carolina 28542

3 Nov 80

From: Director
To: Danny
Subj:

1. Please rewrite on big paper - I can't follow.

Arthur

Twy Tah,

Please make me a copy of the attached NAVFAC letter when you are preparing this correspondence.

ROUTING SLIP SEP 0 9 1980

	ACTION	INFO	INITIAL
BMO			
ABMO		✓	BVR
ADMIN		✓	S
ENVIRON AFF	✓	✓	KUW
F&A BRANCH			
MAINT NCO			
M&R			
OPNS			
PROP			
TELE			
UMACS			
UTIL		✓	
SECRETARY		✓	

COMMENTS:

Julian,
Let's discuss.
BVR

DDS

ASSISTANT CHIEF OF S[illegible]F, FACILITIES

HEADQUARTERS, MARINE CORPS BASE

DATE _____

TO:

[BASE MAINT O]

PUBLIC WORKS O

COMM-ELECT O

MOTOR TRANSPORT O

DIR, FAMILY HOUSING

DIR, BACHELOR HOUSING

BASE FIRE CHIEF

ATTN: _____

1. Attached is forwarded for info/action

2. Please initial, or comment, and return all papers to this office.

3. Your file copy.

4/R

"LET'S THINK OF A FEW REASONS WHY IT CAN BE DONE"

P-MCBCL-1757

DEPARTMENT OF THE NAVY
ATLANTIC DIVISION
NAVAL FACILITIES ENGINEERING COMMAND
NORFOLK, VIRGINIA 23511

TELEPHONE NO.
444-4952
AUTOVON 690-4952

IN REPLY REFER TO:
114:EAE
6280

5 SEP 1980

From: Commander, Atlantic Division, Naval Facilities Engineering Command
To: Commanding General, Marine Corps Base, Camp Lejeune

Subj: Registration and permitting of all operating incinerators

Ref: (a) Meeting Base Maintenance Department (Mr. Dan Sharp)/LANTNAVFACENGCOM (Ms. Beth Estes) on 18 Aug 1980

1. Reference (a) disclosed that the existing pathological incinerator, Building H-78, at the Naval Regional Medical Center, does not have an operating permit from the State of North Carolina's Air Pollution Quality Board. The Clean Air Act (PL 95-95) and the North Carolina Air Pollution Regulations require that this incinerator have an approved operating permit. In order to circumvent a compliance citation and possible fine, an operating application should be filed immediately. The permit application may be obtained by either the Commanding Officer of the Naval Regional Medical Center, or the Commanding General of Camp Lejeune. An agreement between these two commands should determine who will be responsible for, and who will sign the permit for this incinerator. If it is decided that the Commanding Officer of the Naval Regional Medical Center will obtain and sign the incinerator's permit application, then he must also assume responsibilities for the registration of the Medical Center's boilers. The boilers are currently registered by the Marine Corps Base, Camp Lejeune.

2. Additionally, Camp Lejeune has two state registered incinerators, Building PT-38 and Building 1200, that are no longer in operation. Provided there are no plans to reestablish operation of these incinerators, it is recommended that they be removed from the state's registration of air pollution sources. In order to insure the termination of their operating capabilities, it is required that power to these incinerators be disconnected.

3. Notice of action taken on above items requested. If there are any questions relating to the above, please contact Ms. Beth Estes, AUTOVON 690-4952.

Andres Talts
By direction

Copy to:
NAVREGMEDCEN CAMP LEJEUNE
CMC LFF-2
BUMED

ROUTING SLIP MAY 22 1981

	ACTION	INFO	INITIAL
BMO		✓	
ABMO		✓	
ADMIN		✓	
ENVIRON AFF			
F&A BRANCH			
MAINT NCO			
M&R			
OPNS			
PROP			
TELE			
UMACS			
UTIL		✓	
SECRETARY			

COMMENTS:

File

Copy to NREA

TK

N REA

North Carolina Department of Natural Resources & Community Development
James B. Hunt, Jr., Governor
Howard N. Lee, Secretary
DIVISION OF ENVIRONMENTAL MANAGEMENT

May 18, 1981

U.S. Marine Corps
Major General D.B. Barker
Marine Corps Base
Camp Lejeune, NC 28542

Subject: Permit Applications

Dear General Barker:

This will acknowledge receipt of your application for a permit to operate sixteen (16) No. 6 oil-fired boilers located at the Camp Lejeune Marine Corps Base, Camp Lejeune, North Carolina, Onslow County.

Your application will be processed by our office and you will be advised of the results of our review as quickly as possible.

Sincerely,

Chl Wakild

Charles Wakild
Regional Supervisor

cc: WRO
Central Files

Wilmington Regional Office 7225 Wrightsville Avenue, Wilmington, N. C. 28403 Telephone 919/256-4161

Needs to be typed up.

Blank Form

Attached. Original

and at least 4 copies:

original + 2 copies → State

1 copy ~~NRMC~~ LAND DIV 114

1 copy - File

NAVAL REGIONAL MEDICAL CENTER
CAMP LEJEUNE, N.C. 28542

IN REPLY REFER TO

39:KRS/mkt
6280
13 May 1981

From: Commanding Officer
To: Commanding General, Marine Corps Base, Camp Lejeune, N. C. 28542
(Attn: Base Maintenance, Mr. Danny SHARPE)

Subj: Permit Application to Operate the Pathological Incinerator

Ref: (a) Your ltr MAIN/JIW/mac 6280/4 of April 17, 1981

Encl: (1) Application for Permit to Operate Incinerator

1. In accordance with reference (a), enclosure (1) is returned with additional information provided.

2. It is requested that a copy of the submitted application be provided to this command.

K. R. Shankle

K. R. SHANKLE
By direction

NORTH CAROLINA

ENVIRONMENTAL MANAGEMENT COMMISSION

RALEIGH

APPLICATION FOR

A "PERMIT"

TO CONSTRUCT AND OPERATE AIR

POLLUTION ABATEMENT FACILITIES AND/OR EMISSION SOURCES

Filed By: Marine Corps Base
(Name)
Camp Lejeune, N. C.
(Address)

AQ-22

ENCLOSURE (1)

APPLICATION INSTRUCTIONS

THIS APPLICATION IS SUBJECT TO REJECTION UNLESS ALL REQUIRED INFORMATION IS SUBMITTED

1. ATTACH DETAILED ENGINEERING DRAWINGS OF SOURCE(S), PROCESS(ES) AND COLLECTION DEVICE(S) AS REQUESTED IN EACH SECTION. IF MULTIPLE SOURCES OR DEVICES, USE ADDENDUM SHEETS AS NECESSARY.

2. Submit application, detailed engineering drawings, specifications and other supporting data and documents in TRIPLICATE.

3. Attach additional sheets as necessary to complete any portion of the application.

4. The application MUST BE SIGNED by the RESPONSIBLE INDIVIDUAL of the company that is to PURCHASE AND OPERATE the facilities for which a Permit is applied.

5. ALL APPLICANTS MUST COMPLETE THE FIRST PAGE AND SECTIONS I AND VI.

6. If an Incinerator, Fuel Burning Source, Wet Collection Device or Dry Collection Device is to be installed and operated, COMPLETE SECTIONS II, III, IV or V respectively.

7. All applications should be mailed to: ENVIRONMENTAL MANAGEMENT COMMISSION
AIR QUALITY SECTION
P. O. Box 27687
Raleigh, North Carolina 27611

APPLICATION FOR A "PERMIT"
To Construct and Operate Air Pollution Abatement Facilities and/or Emission Sources
Three Copies to be Submitted
Fourth Copy Should be Retained by Applicant

Date: _____

In accordance with the provisions of Article 21 of Chapter 143, General Statutes of North Carolina as amended, application is hereby made by Marine Corps Base, Camp Lejeune, North Carolina
(Name of Company, Establishment, Town, Etc.) (Include Division or Plant Name in Addition to Parent Company if Applicable) in the County of Onslow at Camp Lejeune, N. C.
(Street and City or Town Address of Plant or Facility)
for issuance of a "Permit" to construct and operate air pollution abatement facilities and/or emissions sources at above location as specified in the accompanying drawings, specifications, and other pertinent data:

1. Nature of Operation Conducted at the Above Facility:
Pathological Waste Incineration, Building H-78

2. Description of Process(es) Whose Emission(s) is/are to be Controlled by the Facility or Source(s) Which is/are to be Constructed or Altered. (Complete Section I)

3. Furnish Type and Narrative Description of Proposed Control Device(s).(Complete Appropriate Supplemental Data Sheets for Control Device to be Installed and/or Operated. Include Make and Model Number of Control Device(s) and Number of Identical Units).

4.

Contaminant Emitted:	Weight Rate of Emissions (lb/hr): Without Control Device	With Control Device	Control Efficiency (%): Without Control Device	With Control Device
Particulates	.06			
NO_2	.02			

5. Name and Address of Engineering Firm that Prepared Plans: Winnen Incinerator Company, 932 Broadway, Bedford, Ohio

6. Ultimate Disposition of Collected Pollutants:
Camp Lejeune Landfill

7. Date on Which Facilities are to be Completed and in Operation:
_____, 19____

8. Indicate Period of Time for Which Facilities are Estimated to be Adequate: ____ Years

9. Estimate Cost of Air Pollution Control Device $_____

10. Hours Facility is Operated Per Year: 100

Name: _____
(Responsible Individual of Company Purchasing/Operating Facility...PLEASE PRINT)

Mailing Address: _____

Signature and Title: _____

Telephone Number: _____

AQ-22

I. GENERAL DATA FOR PROCESSES

Attach detailed process engineering drawings, equipment drawings and flow diagrams for the process(es) or source(s) being constructed or altered.

Name of Process: Pathological WAste Incinerator

Total Weight of Materials Entering this Process: 15 lb/hr ~~XXXXXXXX~~

Volume and Temperature of Air Flow Entering Control Device: _____ CFM @ _____ °F

Volume and Temperature of Effluent at Discharge Point to Atmosphere: _____ CFM @ _____ °F

Pollutant(s) to be Controlled: _____

Height of Process Stack or Vent Above Ground Level 22 ft. Inside area of Stack 5.5 ft^2.

Particulate Emission Rate (Before Control) .06 lb/hr

Particle Size Distribution: 0-5μ____%, 5-10μ____%, 10-20μ____%, 20-30μ____%, 30-40μ____%, 40-50μ____%, >50μ____%

Gaseous Emission(s): Name (Chemical Formula)	μg/m³, PPM	or lb/hr
NO_2		.02

II. SUPPLEMENTARY DATA FOR INCINERATORS (Including Conical Incinerators)

Circle Type of Waste or Indicate Composition: Type 0 Type I Type II Type III (Type IV)

Combustible: ____% Non-Combustible: ____% Moisture: 95 % Heat Value: ____BTU/lb

Total Waste Generated Per ~~Day~~ Year 75 lb. Hours Incinerator will be Operated: 100 hrs/~~XXX~~ Year

Design Capacity for Above Waste: 50 lbs/hr Manufacturer and Model Number; Approximate Cost: Winnen Incinerator Co., Model H-401

Primary Chamber Volume: 18 $ft.^3$ Secondary Chamber Volume: _____ $ft.^3$

Air Requirements: Total Excess Air ____% Draft: Natural X Induced ____ Other ____

Overfire Air: ____cfm Underfire Air: ____cfm

Is there an Electronically Controlled, Exhaust Gas Temperature Modulated, Damper Installed on the Conical Incinerator for: Overfire Air Supply____, Underfire Air Supply____, Dome____ Temperature Set Point____°F

Flame Port Temperature: _____ °F Secondary Chamber Temperature: _____ °F

Is there a Continuous Exhaust Gas Temperature Recorder? Yes____ No X

Stack:

Inside Area 5.5 $ft.^2$ Height 22 ft. Gas Velocity 2.25 ft/sec Temperature 1500 °F Fan Capacity ____cfm Stack Lined? _____

Is there a Wet Scrubber?

Yes ____ No X Flow Rate of H_2O into Scrubber ____gal/min Temperature Before Scrubber ____°F

Aux. Fuel: Oil _____ Gas X Other _____ Burner Rating: Primary Chamber ~~[illegible]~~ 200,000 BTU/hr Secondary Chamber ~~[illegible]~~ 200,000 BTU/hr Stack _____BTU/hr

Primary Burner: Is there a ~~XXXXX~~ Timer? Yes X No ____ ~~XXXXXXXX~~ Time: 60 min.

Secondary Burner or Afterburner: Is there a Timer? Yes X No ____ Length of Time Burner is Operated 60 min.

Is the Timer Reset by Charging Door? Yes ____ No X Other Mode of Burner Control _____

Type of Feed: Manual X Automatic _____ If Automatic, Describe _____

Distance from Incinerator to Nearest Structure(s) in which People Live and/or Work. 100 ft.

Signature: _____ Title: _____

Attach detailed dimensioned drawing[illegible] sketch showing internal features of dry[illegible] wood or coal fired boilers, and recovery boilers.

Type of Fuel Burning Source _____ Stack Height Above Ground Level ____ ft. Inside Area of Stack ____ ft^2

Make and Model Number _____ Volume of Furnace ____ ft^3

Specify Actual Amount of Each Fuel Used in Above Source (s):

Coal ____ lb/hr; Oil Grade ____ Amount ____ gal/hr, at ____ BTU/gal and ____ lb/gal or ____ lb/hr

Wood ____ lb/hr; Natural Gas ____ SCF/hr, at ____ BTU/SCF; Other _____

(Specify type, amount and heating value)

Specify Maximum Rating for Each Fuel Burning Source:

Coal ____ Oil ____ Wood ____ Natural Gas ____ Other _____

Maximum Sulfur Content of Fuel ____ % Specify Standby Fuel ____ Maximum % Sulfur ____

Type of Solid Fuel Burning Equipment Used: Hand Fired ___ Spreader Stoker ___ Underfeed Stoker ___ Chain Grate ___

Traveling Grate ___ Pulverizer ___ Cyclone Furnace ___ Other (Specify) _____

Ash Content of Fuel: Specify Method and Schedule of Tube Cleaning, if Applicable:

Coal ____ % Wood ____ % Other ____ % Lancing _____ Tube Blowing _____ Schedule _____

Emission Control Equipment (Describe in Detail in Sections IV and V)

Collection Device: Wet ___ Dry ___ Steam Injection ___ Air Injection ___ Is Collected Flyash Reinjected? ____

Draft on Boiler (Natural ____ Induced ____) ____ cfm at ____ °F

Total Number of Fuel Burning Sources Within Property Boundaries: _____

Maximum Capacity Rating, by Type, for All Fuel Burning Units Excluding that Itemized Above: (Total Like Units)

Coal ____ lb/hr Wood ____ lb/hr Oil ____ gal/hr Natural Gas ____ SCF/hr

IV. SUPPLEMENTARY DATA FOR WET COLLECTION DEVICES

**Attach detailed engineering drawings of the control device and particle size versus removal efficiency curves.*

Liquid Scrubbing Medium and Additives: _____

Total Liquid Injection Rate (Include Recirculated and Make-up Rates) ____ gal/min or gal/1000 ft^3

Operating Pressure Drop Across Device ____ in H_2O

ANSWER FOLLOWING QUESTIONS FOR SPECIFIC DEVICE:

VENTURI SCURBBER: Inlet Area ____ in^2 Throat Area ____ in^2 Throat Velocity ____ ft/sec

GRAVITY SPRAY CHAMBER: Number of Nozzles ____ Liquid Droplet Size ____ u Co-Current ____ Countercurrent ____

WET CYCLONE:

Body Diameter ____ in Length _____ in

Inlet Area ____ in^2 Number of Nozzles _____

Outlet Area ____ in^2

PACKED TOWER OR PLATE TOWER:

Cross-Sectional Area _____ ft^2 Type of Plate _____

Length _____ ft Depth of Packing _____ ft

Number of Plates _____ Type of Packing _____

OTHER WET COLLECTION DEVICES: GIVE COMPLETE DESCRIPTION INCLUDING DESIGN PARAMETERS AND DETAILED ENGINEERING DRAWINGS.

Signature: _____ Title: _____

SUPPLEMENTARY DATA FOR DRY COLLECTION DEVICES

Attach detailed engineering drawings of the control device and particle size versus removal efficiency curves.

BAGHOUSES: Cloth Area _____ ft^2

Bag Material _____

Number of Compartments _____

Pressure - Drop Total _____ in H_2O

Method of Cleaning _____

Air-to-Cloth Ratio _____ ft/min

Time Between Cleaning _____ mins, hrs

ELECTROSTATIC PRECIPITATORS:

GENERAL:

Effective Area of Grounded Collector Plates _____ ft^2

Number of Compartments or Chambers _____ Number of Cells per Compartment _____

Electrical Field Gradient at the Discharge or Emitting Electrodes _____ KV/in

Average Electrical Field Gradient at the the Grounded Collecting Electrodes _____ KV/in

Fields of Treatment _____ Potential Applied to Emitting Wires _____ KV

SINGLE STAGE TYPE:

Distance Between Emitting Wires and Collecting Plates _____ in.

Number of Isolatable Bus Sections _____ Corona Power _____ Watts/1000 cfm

TWO STAGE TYPE:

Distance Between First Stage Emitting Electrodes and Field Receiver Electrodes (Ground) _____ in

Potential Applied to Second Stage Emitting Plates _____ KV

Distance Between Second Stage Emitting Plates and Grounded Collection Plates _____ in

CYCLONES/MULTICYCLONES:

Simple Cyclone

Diameter _____ in

Inlet Dimensions _____

Outlet Dimensions _____

Pressure Drop _____ in H_2O

Number of Cyclones _____

Multicyclone

Diameter _____ in

Inlet Dimensions of Individual Cyclone _____

Outlet Dimensions of Individual Cyclone _____

Pressure Drop _____ in H_2O

Number of Cyclones _____

OTHER DRY COLLECTION DEVICES: GIVE COMPLETE DETAILED ENGINEERING DESCRIPTION AND DRAWINGS.

Signature: _____ Title: _____

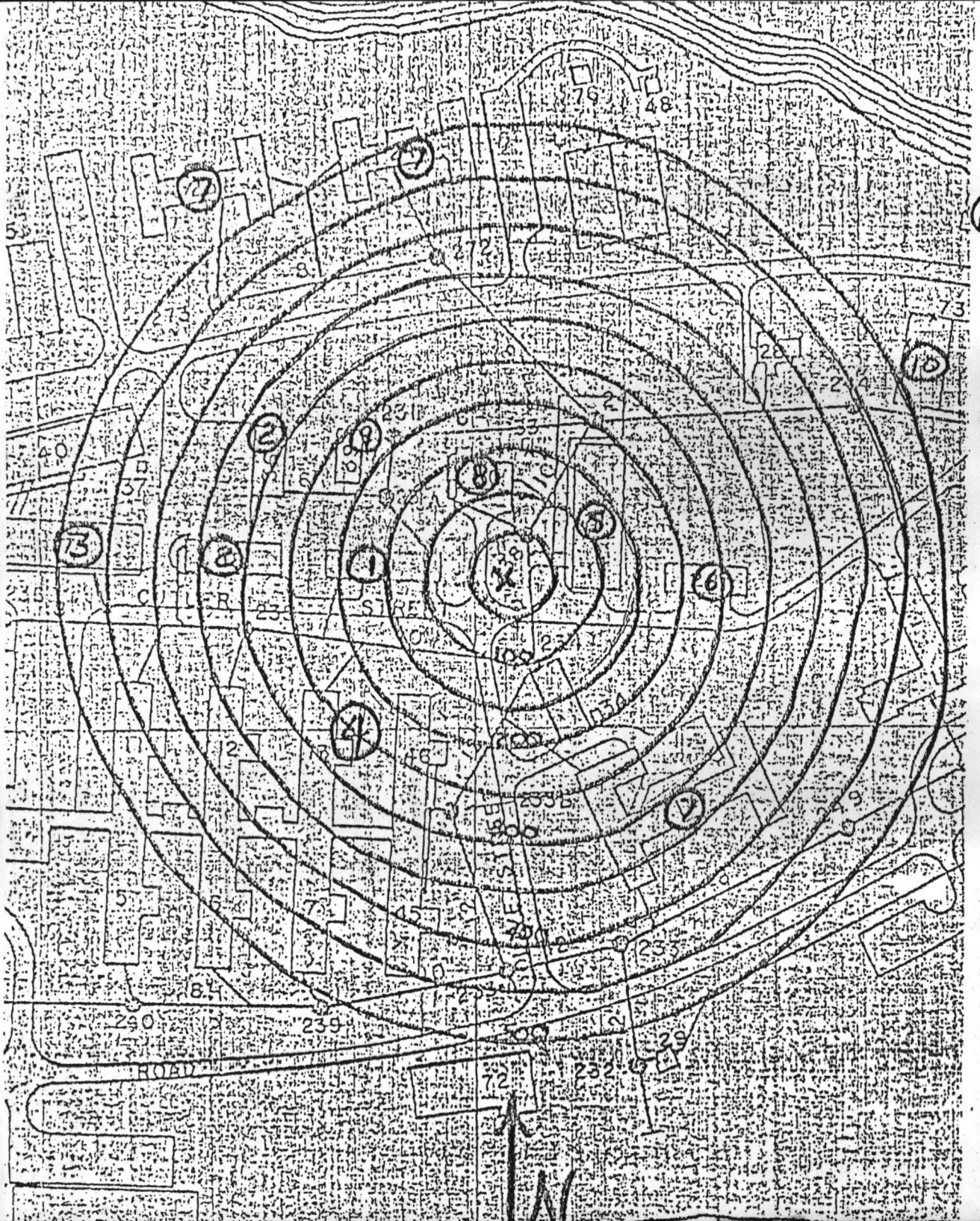

Owner Naval Regional Medical Center

Location Camp Lejeune, North Carolina
(Give Street Address) Building H-78

(10)

INSTRUCTIONS:

1. Show all surrounding buildings and roads within 1000 feet of subject equipment which is located at center of circles.

2. Indicate location and type of building by the use of small numbered circles with the description below.

3. Show roads as lines representing the road edges. Indicate street names and highway numbers.

4. Show wooded or cleared areas by approximate boundary lines and the words "woods", "cleared", "cornfield", etc.

5. Indicate direction of north by arrow.

CODE	DESCRIPTION
①	Maintenance Shop
②	Garage
③	Storage
④	Hospital
⑤	Laundry
⑥	Storage
⑦	Barracks
⑧	Boiler Plant
⑨	Staff Club
⑩	Residence

EXAMPLE ① Church
② Residence

X Indicates location of equipment.

ROUTING SLIP

APR 0 7 1981

	ACTION	INFO	INITIAL
BMO		✓	W
ABMO		✓	[illegible]
ADMIN		✓	[illegible]
ENVIRON AFF	✓		[illegible]
F&A BRANCH			
MAINT NCO			
M&R			
OPNS			
PROP			
TELE			
UMACS			
UTIL			
SECRETARY			

COMMENTS:

ASSISTANT CHIEF OF STAFF, FACILITIES
HEADQUARTERS, MARINE CORPS BASE

DATE 4-6-81

TO:

[BASE MAINT O]

PUBLIC WORKS O

COMM-ELECT O

MOTOR TRANSPORT O

DIR, QUARTERS & HOUSING

DIR, BOQ/BSQ

BASE FIRE CHIEF

ATTN: _____

1. Attached is forwarded for ~~info~~/action.

2. Please initial, or comment, and return all papers to this office.

3. Your file copy.

R. E. Prewitt
By dir

"LET'S THINK OF A FEW REASONS
WHY IT CAN BE DONE"

DEPARTMENT OF THE NAVY
ATLANTIC DIVISION
NAVAL FACILITIES ENGINEERING COMMAND
NORFOLK, VIRGINIA 23511

TELEPHONE NO.
444-4950
IN REPLY REFER TO:
114:CRT
6280

1 APR 1981

From: Commander, Atlantic Division, Naval Facilities Engineering Command
To: Commanding General, Marine Corps Base, Camp Lejeune

Subj: Permit application to operate the pathological incinerator

Ref: (a) CG MCB CAMP LEJEUNE ltr MAIN/DDS/mp 6240 of 16 Mar 1981

Encl: (1) Petition for an operating permit for a pathological incinerator at the Naval Hospital

1. As requested by reference (a), enclosure (1) was reviewed.

2. A change was made, noted in red, on page two of the permit application. It is also recommended that the volume and temperature of the air flow leaving the incinerator be estimated and noted on page two of the permit application.

3. Enclosure (1) is returned for final correction and submittal to the North Carolina Environmental Management Commission. It is requested that a copy of the final submitted permit application be forwarded to this Command, Code 114.

4. Point of contact for this matter is Mr. Charles Thompson, telephone AUTOVON 690-4950.

J. R. Bailey
J. R. BAILEY
By direction

NORTH CAROLINA

ENVIRONMENTAL MANAGEMENT COMMISSION

RALEIGH

APPLICATION FOR

A "PERMIT"

TO CONSTRUCT AND OPERATE AIR

POLLUTION ABATEMENT FACILITIES AND/OR EMISSION SOURCES

Filed By: Marine Corps Base
(Name)

Camp Lejeune, NC
(Address)

AQ-22

ENCLOSURE (1)

APPLICATION INSTRUCTIONS

THIS APPLICATION IS SUBJECT TO REJECTION UNLESS ALL REQUIRED

INFORMATION IS SUBMITTED

1. ATTACH DETAILED ENGINEERING DRAWINGS OF SOURCE(S), PROCESS(ES) AND COLLECTION DEVICE(S) AS REQUESTED IN EACH SECTION. IF MULTIPLE SOURCES OR DEVICES, USE ADDENDUM SHEETS AS NECESSARY.

2. Submit application, detailed engineering drawings, specifications and other supporting data and documents in TRIPLICATE.

3. Attach additional sheets as necessary to complete any portion of the application.

4. The application MUST BE SIGNED by the RESPONSIBLE INDIVIDUAL of the company that is to PURCHASE AND OPERATE the facilities for which a Permit is applied.

5. ALL APPLICANTS MUST COMPLETE THE FIRST PAGE AND SECTIONS I AND VI.

6. If an Incinerator, Fuel Burning Source, Wet Collection Device or Dry Collection Device is to be installed and operated, COMPLETE SECTIONS II, III, IV or V respectively.

7. All applications should be mailed to: **ENVIRONMENTAL MANAGEMENT COMMISSION**
   AIR QUALITY SECTION
   P. O. Box 27687
   Raleigh, North Carolina 27611

APPLICATION FOR A "PERMIT"
To Construct and Operate Air Pollution Abatement Facilities and/or Emission Sources
Three Copies to be Submitted
Fourth Copy Should be Retained by Applicant

Date: _____

In accordance with the provisions of Article 21 of Chapter 143, General Statutes of North Carolina as amended, application is hereby made by Marine Corps Base, Camp Lejeune, North Carolina
(Name of Company, Establishment, Town, Etc.) (Include Division or Plant Name in Addition to Parent Company if Applicable) in the County of Onslow at Camp Lejeune, North Carolina
(Street and City or Town Address of Plant or Facility)
for issuance of a "Permit" to construct and operate air pollution abatement facilities and/or emissions sources at above location as specified in the accompanying drawings, specifications, and other pertinent data:

1. Nature of Operation Conducted at the Above Facility:
   Pathological Waste Incineration, Building H-78
2. Description of Process(es) Whose Emission(s) is/are to be Controlled by the Facility or Source(s) Which is/are to be Constructed or Altered. (Complete Section I)
3. Furnish Type and Narrative Description of Proposed Control Device(s).(Complete Appropriate Supplemental Data Sheets for Control Device to be Installed and/or Operated. Include Make and Model Number of Control Device(s) and Number of Identical Units).
4. Contaminant Emitted: Weight Rate of Emissions (lb/hr): Without Control Device / With Control Device; Control Efficiency (%): Without Control Device / With Control Device

Contaminant Emitted	Weight Rate of Emissions (lb/hr): Without Control Device	With Control Device	Control Efficiency (%): Without Control Device	With Control Device
Particulates	.06			
NO_2	.02			

5. Name and Address of Engineering Firm that Prepared Plans:
   Winnen Incinerator Company, 932 Broadway, Bedford, Ohio
6. Ultimate Disposition of Collected Pollutants:
   Camp Lejeune Landfill
7. Date on Which Facilities are to be Completed and in Operation:
   _____, 19____
8. Indicate Period of Time for Which Facilities are Estimated to be Adequate: ____Years
9. Estimate Cost of Air Pollution Control Device $_____
10. Hours Facility is Operated Per Year: 100

Name: _____
(Responsible Individual of Company Purchasing/Operating Facility...PLEASE PRINT)

Mailing Address: _____

Signature and Title: _____ Telephone Number: _____

AQ-22

I. GENERAL DATA FOR PROCESSES

Attach detailed process engineering drawings, equipment drawings and flow diagrams for the process(es) or source(s) being constructed or altered.

Name of Process: Pathological Waste Incinerator

Total Weight of Materials Entering this Process: 15 lb/hr or ~~XXXXX~~

Volume and Temperature of Air Flow Entering Control Device: _____ CFM @ _____ °F

Volume and Temperature of Effluent at Discharge Point to Atmosphere: _____ CFM @ _____ °F

Pollutant(s) to be Controlled: _____

Height of Process Stack or Vent Above Ground Level 22 ft. Inside area of Stack 5.5 ft^2.

Particulate Emission Rate (Before Control) .06 lb/hr

Particle Size Distribution: 0-5μ____%, 5-10μ____%, 10-20μ____%, 20-30μ____%, 30-40μ____%, 40-50μ____%, >50μ____%

Gaseous Emission(s): Name (Chemical Formula)	$\mu g/m^3$, PPM	or lb/hr
NO_2		.02

II. SUPPLEMENTARY DATA FOR INCINERATORS (Including Conical Incinerators)

Circle Type of Waste or Indicate Composition: Type 0 Type I Type II Type III Type IV

Combustible: ____% Non-Combustible: ____% Moisture: 95 % Heat Value: ____BTU/lb

Total Waste Generated Per ~~Day~~ Year: 75 lb. Hours Incinerator will be Operated: 100 hrs/~~day~~ Year

Design Capacity for Above Waste: 50 lbs/hr Manufacturer and Model Number; Approximate Cost: Winnen Incinerator Co., Model H-401

Primary Chamber Volume: 18 $ft.^3$ Secondary Chamber Volume: _____ $ft.^3$

Air Requirements: Total Excess Air ____% Draft: Natural X Induced ____ Other ____

Overfire Air: ____cfm Underfire Air: ____cfm

Is there an Electronically Controlled, Exhaust Gas Temperature Modulated, Damper Installed on the Conical Incinerator for: Overfire Air Supply____, Underfire Air Supply____, Dome____ Temperature Set Point____°F

Flame Port Temperature: _____ °F Secondary Chamber Temperature: _____ °F

Is there a Continuous Exhaust Gas Temperature Recorder? Yes____ No X

Stack: Inside Area 5.5 $ft.^2$ Height 22 ft. Gas Velocity 2.25 ft/sec Temperature 500 °F Fan Capacity ____cfm Stack Lined? _____

Is there a Wet Scrubber?

Yes ____ No X Flow Rate of H_2O into Scrubber ____gal/min Temperature Before Scrubber ____°F

Aux. Fuel: Oil _____ Gas X Other _____ Burner Rating: Primary Chamber 200,000 BTU/hr Secondary Chamber 200,000 BTU/hr Stack ____BTU/hr

Primary Burner: Is there a ~~Preset~~ Timer? Yes X No ____ ~~Automatic~~ Time: 60 min.

Secondary Burner or Afterburner: Is there a Timer? Yes X No ____ Length of Time Burner is Operated 60 min.

Is the Timer Reset by Charging Door? Yes ____ No X Other Mode of Burner Control _____

Type of Feed: Manual X Automatic _____ If Automatic, Describe _____

Distance from Incinerator to Nearest Structure(s) in which People Live and/or Work. 100 ft.

Signature: _____ Title: _____

III. SUPPLEMENTARY DATA FOR FUEL BURNING SOURCES

Attach detailed dimensioned drawing or sketch showing internal features of dryers, wood or coal fired boilers, and recovery boilers.

Type of Fuel Burning Source _____ Stack Height Above Ground Level _____ ft. Inside Area of Stack _____ ft^2

Make and Model Number _____ Volume of Furnace _____ ft^3

Specify Actual Amount of Each Fuel Used in Above Source (s):

Coal _____ lb/hr; Oil Grade _____ Amount _____ gal/hr, at _____ BTU/gal and _____ lb/gal or _____ lb/hr

Wood _____ lb/hr; Natural Gas _____ SCF/hr, at _____ BTU/SCF; Other _____

(Specify type, amount and heating value)

Specify Maximum Rating for Each Fuel Burning Source:

Coal _____ Oil _____ Wood _____ Natural Gas _____ Other _____

Maximum Sulfur Content of Fuel _____ % Specify Standby Fuel _____ Maximum % Sulfur _____

Type of Solid Fuel Burning Equipment Used: Hand Fired ___ Spreader Stoker ___ Underfeed Stoker ___ Chain Grate ___

Traveling Grate ___ Pulverizer ___ Cyclone Furnace ___ Other (Specify) _____

Ash Content of Fuel: Specify Method and Schedule of Tube Cleaning, if Applicable:

Coal _____ % Wood _____ % Other _____ % Lancing _____ Tube Blowing _____ Schedule _____

Emission Control Equipment (Describe in Detail in Sections IV and V)

Collection Device: Wet ____ Dry ____ Steam Injection ____ Air Injection ____ Is Collected Flyash Reinjected?_____

Draft on Boiler (Natural_____ Induced_____) _____cfm at _____°F

Total Number of Fuel Burning Sources Within Property Boundaries: _____

Maximum Capacity Rating, by Type, for All Fuel Burning Units Excluding that Itemized Above: (Total Like Units)

Coal ____ lb/hr Wood ____ lb/hr Oil ____ gal/hr Natural Gas ____ SCF/hr

IV. SUPPLEMENTARY DATA FOR WET COLLECTION DEVICES

Attach detailed engineering drawings of the control device and particle size versus removal efficiency curves.

Liquid Scrubbing Medium and Additives: _____

Total Liquid Injection Rate (Include Recirculated and Make-up Rates) _____ gal/min or gal/1000 ft^3

Operating Pressure Drop Across Device ____ in H_2O

ANSWER FOLLOWING QUESTIONS FOR SPECIFIC DEVICE:

VENTURI SCURBBER: Inlet Area ____ in^2 Throat Area ____ in^2 Throat Velocity ____ ft/sec

GRAVITY SPRAY CHAMBER: Number of Nozzles ____ Liquid Droplet Size ____ u Co-Current ____ Countercurrent ____

WET CYCLONE:

Body Diameter _____ in Length _____ in

Inlet Area _____ in^2 Number of Nozzles _____

Outlet Area _____ in^2

PACKED TOWER OR PLATE TOWER:

Cross-Sectional Area _____ ft^2 Type of Plate _____

Length _____ ft Depth of Packing _____ ft

Number of Plates _____ Type of Packing _____

OTHER WET COLLECTION DEVICES: GIVE COMPLETE DESCRIPTION INCLUDING DESIGN PARAMETERS AND DETAILED ENGINEERING DRAWINGS.

Signature: _____ Title: _____

V. SUPPLEMENTARY DATA FOR DRY COLLECTION DEVICES

**Attach detailed engineering drawings of the control device and particle size versus removal efficiency curves.*

BAGHOUSES: Cloth Area _____ ft^2

Bag Material _____

Number of Compartments _____

Pressure - Drop Total _____ in H_2O

Method of Cleaning _____

Air-to-Cloth Ratio _____ ft/min

Time Between Cleaning _____ mins, hrs

ELECTROSTATIC PRECIPITATORS:

GENERAL:

Effective Area of Grounded Collector Plates _____ ft^2

Number of Compartments or Chambers _____ Number of Cells per Compartment _____

Electrical Field Gradient at the Discharge or Emitting Electrodes _____ KV/in

Average Electrical Field Gradient at the the Grounded Collecting Electrodes _____ KV/in

Fields of Treatment _____ Potential Applied to Emitting Wires _____ KV

SINGLE STAGE TYPE:

Distance Between Emitting Wires and Collecting Plates _____ in.

Number of Isolatable Bus Sections _____ Corona Power _____ Watts/1000 cfm

TWO STAGE TYPE:

Distance Between First Stage Emitting Electrodes and Field Receiver Electrodes (Ground) _____ in

Potential Applied to Second Stage Emitting Plates _____ KV

Distance Between Second Stage Emitting Plates and Grounded Collection Plates _____ in

CYCLONES/MULTICYCLONES:

Simple Cyclone

Diameter _____ in

Inlet Dimensions _____

Outlet Dimensions _____

Pressure Drop _____ in H_2O

Number of Cyclones _____

Multicyclone

Diameter _____ in

Inlet Dimensions of Individual Cyclone _____

Outlet Dimensions of Individual Cyclone _____

Pressure Drop _____ in H_2O

Number of Cyclones _____

OTHER DRY COLLECTION DEVICES: GIVE COMPLETE DETAILED ENGINEERING DESCRIPTION AND DRAWINGS.

Signature: _____

Title: _____

VI. AREA DIAGRAM

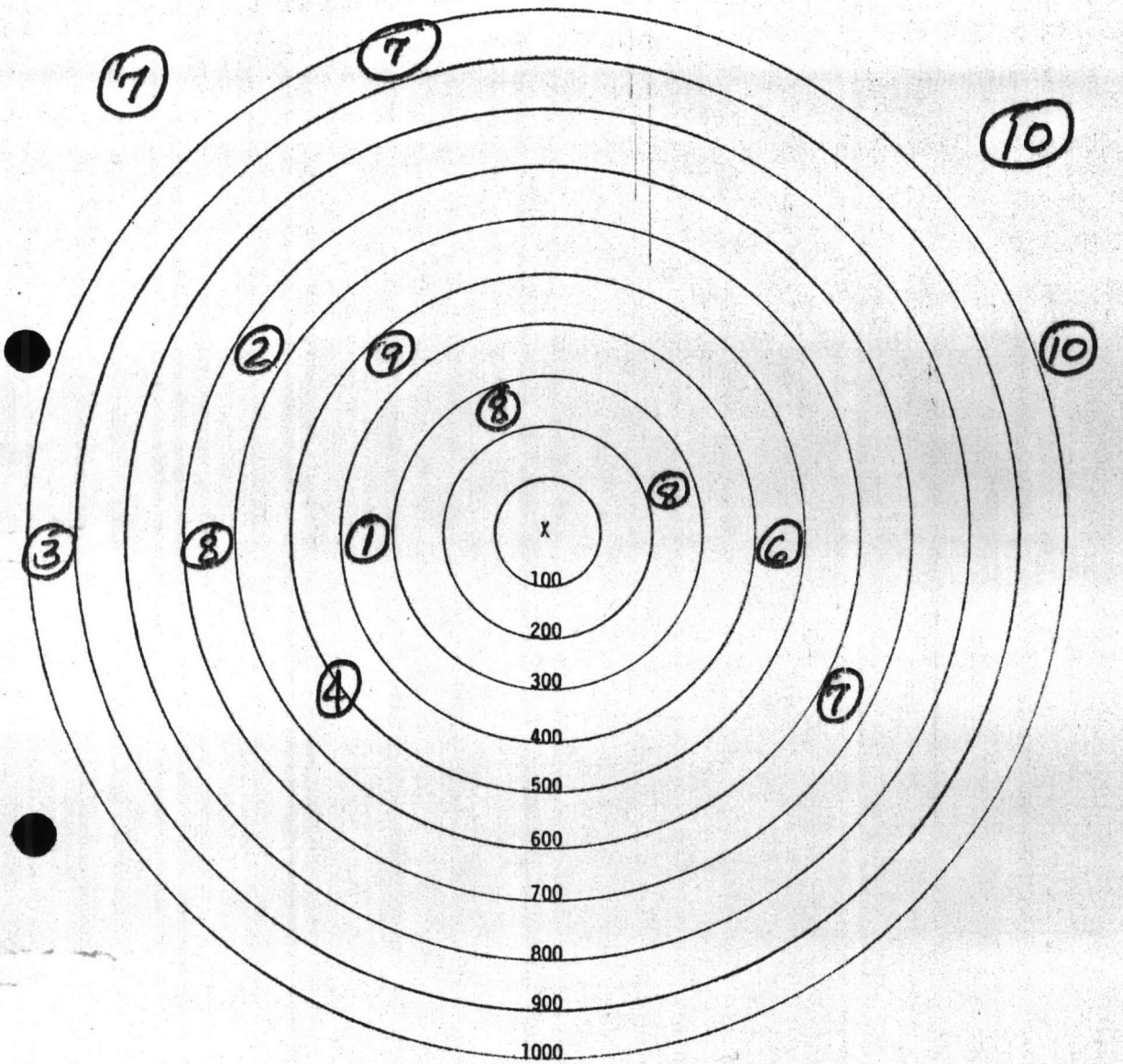

Owner Naval Regional Medical Center

Location Camp Lejeune, North Carolina
(Give Street Address) Building H-78

INSTRUCTIONS:

1. Show all surrounding buildings and roads within 1000 feet of subject equipment which is located at center of circles.
2. Indicate location and type of building by the use of small numbered circles with the description below.
3. Show roads as lines representing the road edges. Indicate street names and highway numbers.
4. Show wooded or cleared areas by approximate boundary lines and the words "woods", "cleared", "cornfield", etc.
5. Indicate direction of north by arrow.

CODE	DESCRIPTION
①	
②	
③	
④	
⑤	
⑥	
⑦	
⑧	
⑨	
⑩	

EXAMPLE ① Church
② Residence

X Indicates location of equipment.

JUL 25 1978

	ACTION	INFO	INITIAL
BMO			
ABMO		✓	BWR
MAINT NCO			
SAFETY CHMN			
PROP			
M&R			
OPNS			
ADMIN			
TELE			
UTIL		✓	BW
ENVIRON AFF	file	✓	
SECRETARY			
F&A BRANCH			
UMACS			
MME			

File

North Carolina Department of Natural Resources & Community Development
James B. Hunt, Jr., Governor
Howard N. Lee, Secretary

June 27, 1978

Mr. F. W. Tief, Brigadier General
United States Marine Corps
Marine Corps Base
Camp Lejeune, North Carolina 28542

Dear Mr. Tief:

Subject: Permit No. 3822
Marine Corps Base
Camp Lejeune, North Carolina

In accordance with your application received June 2, 1978, we are forwarding herewith Permit No. 3822 to Marine Corps Base, Camp Lejeune, North Carolina for the construction and operation of a No. 6 oil-fired boiler (121 x 10^6 BTU per hour heat input) and appurtenances, and for the discharge of the associated stack gases at its facility located at Camp Lejeune, North Carolina, Onslow County.

This Permit shall be effective from the date of its issuance until July 1, 1981, is nontransferable to future owners and operators, and shall be subject to the conditions and limitations as specified therein.

Sincerely,

A. F. McRorie, Director
Division of Environmental Management

HDL:el

Enclosure

NORTH CAROLINA

ENVIRONMENTAL MANAGEMENT COMMISSION

DEPARTMENT OF NATURAL RESOURCES & COMMUNITY DEVELOPMENT

Raleigh

P E R M I T

For the Discharge of Air Contaminants Into the Atmosphere

In accordance with the provisions of Article 21B of Chapter 143, General Statutes of North Carolina as amended, and other applicable Laws, Rules and Regulations,

PERMISSION IS HEREBY GRANTED TO

Marine Corps Base
Camp Lejeune, North Carolina

FOR THE

construction and operation of a No. 6 oil-fired boiler (121 x 10^6 BTU per hour heat input) and appurtenances, and for the discharge of the associated stack gases at its facility located at Camp Lejeune, North Carolina, Onslow County,

in accordance with the application received June 2, 1978, and in conformity with the plans, specifications, and other supporting data, all of which are filed with the Department of Natural Resources & Community Development and are incorporated as part of this Permit.

This Permit shall be effective from the date of its issuance until July 1, 1981, is nontransferable to future owners and operators, and shall be subject to the following specified conditions and limitations:

1. This Permit shall become voidable unless the boiler is constructed in accordance with the approved plans, specifications and other supporting data and is completed and placed in operation on or before April 30, 1979, or as this date may be amended.

2. The boiler shall be properly operated and maintained at all times in such a manner as to effect an overall reduction in air pollution in keeping with the application and otherwise to reduce air contamination to the extent necessary to comply with applicable Environmental Management Commission Regulations, including 15 NCAC 2D .0503, .0516, and .0521 and in no case shall the sulfur dioxide emissions from the boiler exceed 2.3 pounds per million BTU input.

3. The boiler shall be evaluated for compliance with Environmental Management Commission Regulation(s) 15 NCAC 2D .0521 by the Division of Environmental Management, at the aforementioned location, within 90 days of the operational date. This Permit shall become voidable, with proper notice to the company, if the results of the evaluation indicate that the boiler does not meet applicable laws, rules, and regulations.

4. A violation of any term or condition of this Permit shall subject the Permittee to enforcement procedures contained in North Carolina General Statutes 143-215.114, including assessment of civil penalties.

Permit issued this the 27th day of June, 1978.

NORTH CAROLINA ENVIRONMENTAL MANAGEMENT COMMISSION

A. F. McRorie

A. F. McRorie, Director
Division of Environmental Management
By Authority of the Secretary of the Department
of Natural Resources & Community Development

Permit No. 3822

NORTH CAROLINA

ENVIRONMENTAL MANAGEMENT COMMISSION

RALEIGH

APPLICATION FOR

A "PERMIT"

TO CONSTRUCT AND OPERATE AIR

POLLUTION ABATEMENT FACILITIES AND/OR EMISSION SOURCES

Filed By: Brigadier General F. W. Tief
(Name)

Marine Corps Base
(Address)

Camp Lejeune, North Carolina

AQ-22 Rev. 11/73

APPLICATION INSTRUCTIONS

THIS APPLICATION IS SUBJECT TO REJECTION UNLESS ALL REQUIRED

INFORMATION IS SUBMITTED

1. ATTACH DETAILED ENGINEERING DRAWINGS OF SOURCE(S), PROCESS(ES) AND COLLECTION DEVICE(S) AS REQUESTED IN EACH SECTION. IF MULTIPLE SOURCES OR DEVICES, USE ADDENDUM SHEETS AS NECESSARY.

2. Submit application, detailed engineering drawings, specifications and other supporting data and documents in TRIPLICATE.

3. Attach additional sheets as necessary to complete any portion of the application.

4. The application MUST BE SIGNED by the RESPONSIBLE INDIVIDUAL of the company that is to PURCHASE AND OPERATE the facilities for which a Permit is applied.

5. ALL APPLICANTS MUST COMPLETE THE FIRST PAGE AND SECTIONS I AND VI.

6. If an Incinerator, Fuel Burning Source, Wet Collection Device or Dry Collection Device is to be installed and operated, COMPLETE SECTIONS II, III, IV or V respectively.

7. All applications should be mailed to: **ENVIRONMENTAL MANAGEMENT COMMISSION**
AIR QUALITY SECTION
P. O. Box 27687
Raleigh, North Carolina 27611

APPLICATION FOR A "PERMIT"
To Construct and Operate Air Pollution Abatement Facilities and/or Emission Sources
Three Copies to be Submitted
Fourth Copy Should be Retained by Applicant

Date: 14 APR 1978

In accordance with the provisions of Article 21 of Chapter 143, General Statutes of North Carolina as amended, application is hereby made by Marine Corps Base, Camp Lejeune
(Name of Company, Establishment, Town, Etc.) (Include Division or Plant Name in Addition to Parent Company if Applicable)

in the County of Onslow at Jacksonville, North Carolina
(Street and City or Town Address of Plant or Facility)
for issuance of a "Permit" to construct and operate air pollution abatement facilities and/or emissions sources at above location as specified in the accompanying drawings, specifications, and other pertinent data:

1. Nature of Operation Conducted at the Above Facility:
Military operations

2. Description of Process(es) Whose Emission(s) is/are to be Controlled by the Facility or Source(s) Which is/are to be Constructed or Altered. (Complete Section I)

Boiler, No. 6 Fuel Oil

3. Furnish Type and Narrative Description of Proposed Control Device(s).(Complete Appropriate Supplemental Data Sheets for Control Device to be Installed and/or Operated. Include Make and Model Number of Control Device(s) and Number of Identical Units).

No. 6 Oil fired, no control device.

4. Contaminant Emitted:	Weight Rate of Emissions (Lb/hr): Without Control Device	With Control Device	Control Efficiency (%): Without Control Device	With Control Device
SO^2 and Dust	Unknown	Negligible	0	99%

5. Name and Address of Engineering Firm that Prepared Plans:

6. Ultimate Disposition of Collected Pollutants:
None

7. Date on Which Facilities are to be Completed and in Operation:
April, 19 79

8. Indicate Period of Time for Which Facilities are Estimated to be Adequate: 20 Years

9. Estimate Cost of Air Pollution Control Device $ 0

10. Hours Facility is Operated Per Year: 8,760

Name: Brigadier General F. W. Tief
(Responsible Individual of Company Purchasing/Operating Facility...PLEASE PRINT)

Mailing Address: Marine Corps Base
Camp Lejeune,
North Carolina 28542

Signature and Title: FW Tief
F. W. TIEF
Commanding General

Telephone Number: 451-5003

AQ-22 Rev. 11/73

I. GENERAL DATA FOR PROCESSES

**Attach detailed process engineering drawings, equipment drawings and flow diagrams for the process(es) or source(s) being constructed or altered.*

Name of Process: _____

Total Weight of Materials Entering this Process: _____ lb/hr or ton/hr

Volume and Temperature of Air Flow Entering Control Device: _____ CFM @ _____ °F

Volume and Temperature of Effluent at Discharge Point to Atmosphere: _____ CFM @ _____ °F

Pollutant(s) to be Controlled: _____

Height of Process Stack or Vent Above Ground Level _____ ft. Inside area of Stack _____ ft^2.

Particulate Emission Rate (Before Control) _____ lb/hr

Particle Size Distribution: 0-5μ____%, 5-10μ____%, 10-20μ____%, 20-30μ____%, 30-40μ____%, 40-50μ____%, >50μ____%

Gaseous Emission(s): Name (Chemical Formula) μg/m^3, PPM or lb/hr

II. SUPPLEMENTARY DATA FOR INCINERATORS (Including Conical Incinerators)

Circle Type of Waste or Indicate Composition: Type 0 Type I Type II Type III Type IV

Combustible: _____% Non-Combustible: _____% Moisture: _____% Heat Value: _____BTU/lb

Total Waste Generated Per Day: _____ lb. Hours Incinerator will be Operated: _____ hrs/day

Design Capacity for Above Waste: _____ lbs/hr Manufacturer and Model Number; Approximate Cost: _____

Primary Chamber Volume: _____ $ft.^3$ Secondary Chamber Volume: _____ $ft.^3$

Air Requirements: Total Excess Air ____% Draft: Natural ____ Induced ____ Other ____

Overfire Air: ____cfm Underfire Air: ____cfm

Is there an Electronically Controlled, Exhaust Gas Temperature Modulated, Damper Installed on the Conical Incinerator for: Overfire Air Supply____, Underfire Air Supply____, Dome____ Temperature Set Point____°F

Flame Port Temperature: _____ °F Secondary Chamber Temperature: _____ °F

Is there a Continuous Exhaust Gas Temperature Recorder? Yes____ No____

Stack:

Inside Area ____$ft.^2$ Height ____ft. Gas Velocity ____ft/sec Temperature ____°F Fan Capacity ____cfm Stack Lined? _____

Is there a Wet Scrubber?

Yes ____ No ____ Flow Rate of H_2O into Scrubber ____gal/min Temperature Before Scrubber ____°F

Aux. Fuel: Oil: _____ Gas _____ Other _____ Burner Rating: Primary Chamber _____ BTU/hr Secondary Chamber _____ BTU/hr Stack _____ BTU/hr

Primary Burner: Is there a Preheat Timer? Yes ____ No ____ Preheating Time: _____ min.

Secondary Burner or Afterburner: Is there a Timer? Yes ____ No ____ Length of Time Burner is Operated _____ min.

Is the Timer Reset by Charging Door? Yes ____ No ____ Other Mode of Burner Control _____

Type of Feed: Manual _____ Automatic _____ If Automatic, Describe _____

Distance from Incinerator to Nearest Structure(s) in which People Live and/or Work. _____ ft.

Signature: _____ Title: _____

III. SUPPLEMENTARY DATA FOR FUEL BURNING SOURCES

Attach detailed dimensioned drawing or sketch showing internal features of dryers, wood or coal fired boilers, and recovery boilers.

Type of Fuel Burning Source Boiler Stack Height Above Ground Level 100 ft. Inside Area of Stack 10.8 ft^2

Make and Model Number 10719 Volume of Furnace 1700 ft^3

Specify Actual Amount of Each Fuel Used in Above Source (s):

Coal ____ lb/hr; Oil Grade 6 Amount 840 gal/hr, at 144,000 BTU/gal and ____ lb/gal or ____ lb/hr

Wood ____ lb/hr; Natural Gas ____ SCF/hr, at ____ BTU/SCF; Other _____

(Specify type, amount and heating value)

Specify Maximum Rating for Each Fuel Burning Source:

Coal ____ Oil 840 g/hr Wood ____ Natural Gas ____ Other _____

Maximum Sulfur Content of Fuel 2.0 % Specify Standby Fuel None Maximum % Sulfur ____

Type of Solid Fuel Burning Equipment Used: Hand Fired ___ Spreader Stoker ___ Underfeed Stoker ___ Chain Grate ___

DNA

Traveling Grate ___ Pulverizer ___ Cyclone Furnace ___ Other (Specify) _____

Ash Content of Fuel: Specify Method and Schedule of Tube Cleaning, if Applicable:

Coal ____ % Wood ____ % Other ____ % Lancing _____ Tube Blowing _____ Schedule _____

Emission Control Equipment (Describe in Detail in Sections IV and V)

Collection Device: Wet ___ Dry ___ Steam Injection ___ Air Injection ___ Is Collected Flyash Reinjected? ____

Draft on Boiler (Natural ____ Induced X) ____ cfm at ____ °F

Total Number of Fuel Burning Sources Within Property Boundaries: 5

Maximum Capacity Rating, by Type, for All Fuel Burning Units Excluding that Itemized Above: (Total Like Units) 4 Units

Coal 911 lb/hr Wood ___ lb/hr Oil ___ gal/hr Natural Gas ___ SCF/hr

IV. SUPPLEMENTARY DATA FOR WET COLLECTION DEVICES

Attach detailed engineering drawings of the control device and particle size versus removal efficiency curves.

Liquid Scrubbing Medium and Additives: _____

Total Liquid Injection Rate (Include Recirculated and Make-up Rates) ____ gal/min or gal/1000 ft^3

Operating Pressure Drop Across Device ____ in H_2O

ANSWER FOLLOWING QUESTIONS FOR SPECIFIC DEVICE:

VENTURI SCRUBBER: Inlet Area ____ in^2 Throat Area ____ in^2 Throat Velocity ____ ft/sec

GRAVITY SPRAY CHAMBER: Number of Nozzles ____ Liquid Droplet Size ____ u Co-Current ____ Countercurrent ____

WET CYCLONE:

Body Diameter ____ in Length _____ in

Inlet Area ____ in^2 Number of Nozzles _____

Outlet Area ____ in^2

PACKED TOWER OR PLATE TOWER:

Cross-Sectional Area _____ ft^2 Type of Plate _____

Length _____ ft Depth of Packing _____ ft

Number of Plates _____ Type of Packing _____

OTHER WET COLLECTION DEVICES: GIVE COMPLETE DESCRIPTION INCLUDING DESIGN PARAMETERS AND DETAILED ENGINEERING DRAWINGS.

Signature: _____ Title: _____

V. SUPPLEMENTARY DATA FOR DRY COLLECTION DEVICES

**Attach detailed engineering drawings of the control device and particle size versus removal efficiency curves.*

BAGHOUSES: Cloth Area _____ ft^2

Bag Material _____

Number of Compartments _____

Pressure - Drop Total _____ in H_2O

Method of Cleaning _____

Air-to-Cloth Ratio _____ ft/min

Time Between Cleaning _____ mins, hrs

ELECTROSTATIC PRECIPITATORS:

GENERAL:

Effective Area of Grounded Collector Plates _____ ft^2

Number of Compartments or Chambers _____ Number of Cells per Compartment _____

Electrical Field Gradient at the Discharge or Emitting Electrodes _____ KV/in

Average Electrical Field Gradient at the the Grounded Collecting Electrodes _____ KV/in

Fields of Treatment _____ Potential Applied to Emitting Wires _____ KV

SINGLE STAGE TYPE:

Distance Between Emitting Wires and Collecting Plates _____ in.

Number of Isolatable Bus Sections _____ Corona Power _____ Watts/1000 cfm

TWO STAGE TYPE:

Distance Between First Stage Emitting Electrodes and Field Receiver Electrodes (Ground) _____ in

Potential Applied to Second Stage Emitting Plates _____ KV

Distance Between Second Stage Emitting Plates and Grounded Collection Plates _____ in

CYCLONES/MULTICYCLONES:

Simple Cyclone

Diameter _____ in

Inlet Dimensions _____

Outlet Dimensions _____

Pressure Drop _____ in H_2O

Number of Cyclones _____

Multicyclone

Diameter _____ in

Inlet Dimensions of Individual Cyclone _____

Outlet Dimensions of Individual Cyclone _____

Pressure Drop _____ in H_2O

Number of Cyclones _____

OTHER DRY COLLECTION DEVICES: GIVE COMPLETE DETAILED ENGINEERING DESCRIPTION AND DRAWINGS.

Signature: _____

Title: _____

VI. AREA DIAGRAM

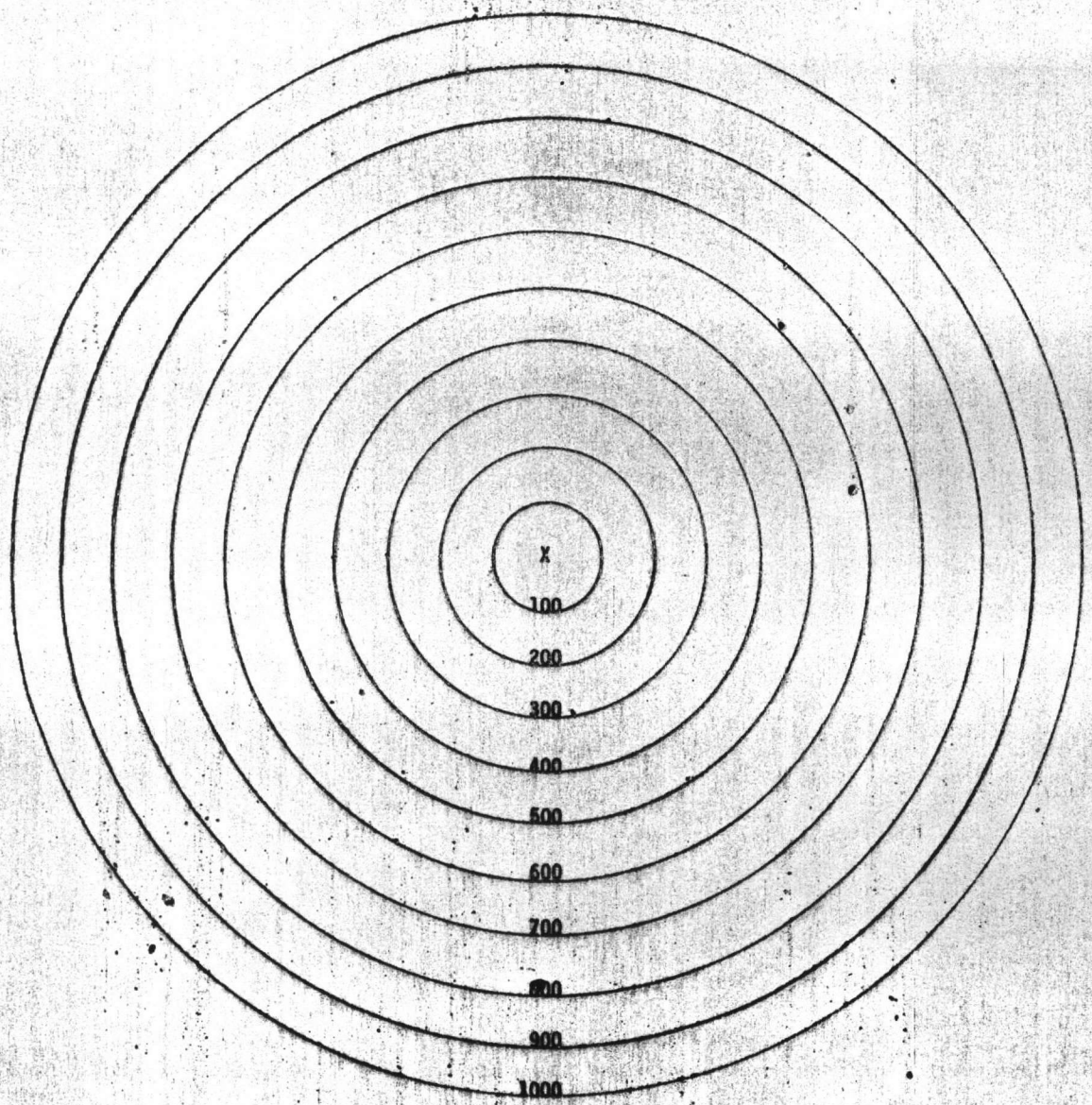

Owner Marine Corps Base, Camp Lejeune

Location Jacksonville, N. C.
(Give Street Address)

INSTRUCTIONS:

1. Show all surrounding buildings and roads within 1000 feet of subject equipment which is located at center of circles.
2. Indicate location and type of building by the use of small numbered circles with the description below.
3. Show roads as lines representing the road edges. Indicate street names and highway numbers.
4. Show wooded or cleared areas by approximate boundary lines and the words "woods", "cleared", "cornfield", etc.
5. Indicate direction of north by arrow.

CODE	DESCRIPTION
①	
②	
③	
④	
⑤	
⑥	
⑦	
⑧	
⑨	
⑩	

EXAMPLE ① Church
② Residence

X Indicates location of equipment.

NREA

UNITED STATES MARINE CORPS
MARINE CORPS BASE
CAMP LEJEUNE, NORTH CAROLINA 28542

IN REPLY REFER TO
MAIN/TH/rn
13700

Mr. Charles Wakild
Regional Supervisor
Department of Natural Resources
and Community Development
Division of Environmental Management
7225 Wrightsville Avenue
Wilmington, NC 28403

Dear Mr. Wakild:

In accordance with North Carolina Administrative Code, Title 15, Chapter 2, Subchapter 2H, Section .0603, application is hereby made for renewal of Permit No. 3822, covering the operation of a No. 6 oil-fired boiler (121 x 10^6 BTU per hour heat input) and appurtenances, and for the discharge of the associated stack gases in the Hadnot Point area of Camp Lejeune.

No modifications or alterations have been made to the permitted boiler subsequent to the issuance of the original permit. Repair work that has been made in the boiler room includes replacement of a stop-check valve, expansion loop, and header stop valve in the steam discharge line between the boiler and the plant steam header, which in no way alters the operating parameters of the boiler.

If you have any further question on this matter, please contact Mr. Danny Sharpe, Base Maintenance Department, telephone (919) 451-5003.

Sincerely,

D. B. BARKER
Major General, U. S. Marine Corps
Commanding General

11 June 81
J dW

Original given
To Terry Hateley, Utilities
on 5 June 81

DDS