DEPARTMENT OF THE NAVY

ATLANTIC DIVISION, NAVAL FACILITIES ENGINEERING COMMAND

NAVAL STATION, NORFOLK, VIRGINIA

Booth

N62470-75-B-5109

NAVFAC SPECIFICATION
NO. 05-75-5109

Appropriation: O&MN-R
1751106.2720

Officer in Charge of Construction
Jacksonville, North Carolina Area
Building 1005
Marine Corps Base
Camp Lejeune, North Carolina 28542

REPLACE WATER WELLS ~~M-627~~ 629 AND M-~~244,~~ 630 MONTFORD POINT
(HQMC 5065)
at the

MARINE CORPS BASE, CAMP LEJEUNE, NORTH CAROLINA

DESIGN BY: Henry von Oesen and Associates, Inc.
Wilmington, North Carolina

SPECIFICATION PREPARED BY: Civil - Structural: J. R. Benson, Jr.
Electrical: W. B. King

Approved by: [signature] Date: 10 February 1975

$88,886.00

start June 23 1975
Complete Mar 16 1976

A priority rating will apply to this contract upon award. The Contractor shall follow the provisions of DMS Reg. 1 and all other applicable regulations and orders of Business and Defense Services Administration in obtaining controlled materials and other products and materials needed to perform this contract.

All questions concerning the plans and specifications occurring prior to bid opening shall be presented to the Director of Design Division, Public Works Department, Building 1005, Marine Corps Base, Camp Lejeune, North Carolina; telephone, Jacksonville, North Carolina, area code 919, 451-2213. Questions requiring interpretation of drawings and specifications must be submitted at least 7 days before bid opening. Interpretations or modifications to specifications made as a result of questions will be made by amendment only, and unless so done, all bidders should base their bids on the plans and specifications as issued.

All questions pertaining to bidding procedures and for prior appointment to inspect the site of the work before bid opening shall be presented to the Officer in Charge of Construction, Jacksonville, North Carolina Area, Building 1005, Marine Corps Base, Camp Lejeune, North Carolina; telephone, Jacksonville, North Carolina, area code 919, 451-2581.

NOTICE

The Government forms may be obtained or examined at the Public Works Office, Building 1005, Marine Corps Base, Camp Lejeune, North Carolina. NAVFAC, Federal and Military specifications and other non-Government material referred to may be examined at the Public Works Office. Federal and Military specifications may be obtained from the Commanding Officer, Naval Publications and Forms Center, 5801 Tabor Avenue, Philadelphia, Pennsylvania 19120, area code 215, telephone 697-3321; requests for copies of the specifications should indicate the contract for which required and the identification number of each specification requested. Non-Government specifications may be obtained from the issuing organization.

CONTENTS

DIVISION 1. GENERAL REQUIREMENTS

SECTION 1A. General Paragraphs
1B. Additional General Paragraphs
1C. Bids

SECTION 1A. GENERAL PARAGRAPHS

1. GENERAL INTENTION: It is the declared and acknowledged intention and meaning to provide and secure Replace Water Wells M-627 and M-244, Montford Point, complete and ready for use.

2. GENERAL DESCRIPTION: The work includes provision of two deep wells for water supply, prefabricated metal buildings, pumps, piping, electrical work and incidental related work.

3. LOCATION: The work shall be located at the Marine Corps Base, Camp Lejeune, North Carolina, approximately as shown. The exact location will be indicated by the Officer in Charge of Construction (OICC).

4. COMMENCEMENT, PROSECUTION, AND COMPLETION OF WORK: If this contract is preceded by a "Notice of Award", with the prescribed bond forms attached, the Contractor shall execute the bonds and promptly return same to the OICC within 15 calendar days from the date of the "Notice of Award". The contract time for completion shall commence 15 calendar days after award, and the Contractor shall prosecute said work diligently to complete the entire work ready for use within 270 calendar days thereafter. The time stated for completion shall include final clean-up of the premises.

5. LIQUIDATED DAMAGES: In case of failure on the part of the Contractor to complete the work within the time fixed in the contract or any extensions thereof, the Contractor shall pay to the Government as liquidated damages pursuant to Clause 5 of Standard Form 23-A the sum of $25 for each calendar day of delay.

6. DRAWINGS ACCOMPANY SPECIFICATION: The following drawings accompany this specification and are a part hereof. Drawings are the property of the Government and shall not be used for any purpose other than that contemplated by the specification.

EFD DWG. NO.	NAVFAC DWG. NO.	TITLE
119671	4019671	Overall Plan
119672	4019672	Wells and Details
119673	4019673	Electrical and Details

7. FACTORY INSPECTION: (See Clause 10 of Standard Form 23-A.) Factory inspection of material and equipment for which tests at the place of manufacture are required in referenced specifications will be waived if

notarized copies of factory reports are furnished that show compliance with the specification requirements. Factory inspection will be required only where specified herein or in the technical sections of this specification. The Government reserves the right to charge to the Contractor any additional cost of Government inspection and tests when materials and equipment are not ready at the time inspection and tests are requested by the Contractor.

8. INFORMATION REQUIRED OF THE CONTRACTOR: Within 30 days after the award of the contract, furnish to the OICC the names and addresses of the manufacturer of the following items, together with catalog information or other identifying description: Prefabricated Metal Buildings, pumps, engines, louvers, valves, well screen, motors, electrical panels, lighting fixtures, switches, motor controllers, conduit, receptacles, heaters, wire and cable and components.

9. DRAWINGS AND DATA REQUIRED OF THE CONTRACTOR: Specification MIL-D-1000 shall be used as a guide and its use is encouraged, for all drawings and data submitted by the Contractor. Conformance to the provisions of specification MIL-D-1000 is not mandatory for maps, sketches, presentation drawings, perspectives, renderings, and all other drawings not requiring Naval Facilities Engineering Command drawing numbers. Before starting the fabrication or installation of any of this work, the Contractor shall submit to the OICC for and receive approval of, in accordance with Clause 53 of form NAVFAC 4330/5, such drawings as may be required, including those showing: Prefabricated metal buildings, pumps, engines, louvers, panelboards, lighting fixtures, heaters and motor starters.

10. MINIMUM WAGE RATES AND OTHER LABOR STANDARDS: The Contractor shall pay mechanics and laborers employed or working directly upon the site of the work wage rates not less than those contained in the attached wage determination decision of the Secretary of Labor. Rates for General Building Construction schedule shall apply to all work to this contract. Other requirements and information are contained in the section entitled "Additional General Paragraphs".

11. GOVERNMENT WORK AND MATERIALS: Paragraph 19 of Section 1B does not apply. The Government will furnish water and electricity at the nearest standard outlets at no cost to the Contractor for Construction purposes and performance test.

12. NORTH CAROLINA SALES AND USE TAX is required. (See also section entitled "Additional General Paragraphs".)

13. TECHNICAL PUBLICATIONS: The Contractor shall furnish to the OICC three copies each of installation, operation maintenance manuals and parts list for all Contractor-furnished mechanical and electrical equipment.

13.1 Operating instructions for the principal plant mechanical and electrical components, for use by operating personnel, shall be provided. They shall be laminated between thermoplastic sheets and affixed where directed. The instructions shall describe the function of the equipment, its most economical operation, start-up and shut-down procedures, procedures to follow in the event of failure, normal maintenance practices, and caution and warning notices.

13.2 Maintenance and operation manual shall be furnished to the OICC for approval. The manual shall be mounted in flexible binders with oil-resistant covers and shall contain, but not be limited to, installation and operating instructions, maintenance procedures, illustrations, drawings, detailed descriptions, tests, adjustment, safety precautions, and parts list.

13.3 Parts list, giving part numbers and prices for the equipment furnished, shall be submitted to the OICC as soon as practicable after the award of the contract, but not later than 90 days after notice of award has been received.

14. CERTIFICATE OF CURRENT COST OR PRICING DATA is required. (See also section entitled "Additional General Paragraphs".)

15. IDENTIFICATION: All catalog cuts, shop drawings, samples and other data submitted for approval shall specifically identify the specification paragraph or contract drawing by number where each item submitted is required to be provided. All submittals shall be clearly marked in ink to indicate the specific item(s) submitted for approval.

16. SCHEDULING THE WORK: Immediately after award, the Contractor shall meet with the OICC and prepare a schedule of work. The existing water system will remain in operation during the entire construction period and the Contractor shall conduct his operations so as to cause the least possible interference with the normal operations of the activity. Permission to interrupt any utility service shall be requested in writing at least ten days in advance and approval of the OICC shall be received before any service is interrupted. Interruptions of utility services will be allowed only when they will cause no interference with the operations of the Activity. The normal hours of operation of the Water Treatment Plant and water system are 24 hours per day, seven days per week. The raw water main serving existing well M-627 may be shut off throughout the course of the work. Existing well M-244 shall be kept in operation until new well M-244 is ready for operation, at which time the valve in the existing raw water line may be shut off and the connection of the new well into the raw water line be made.

17. SAFETY PROGRAM: The Contractor shall implement a safety program conforming to the requirements of Federal, State and Local laws, rules and

regulations. The program shall include, but is not limited to, the following:

a. "Occupational Safety and Health Standards", which can be examined at the office of the OICC or be ordered from the Superintendent of Documents, U.S. Government Printing Office, Washington, D. C. 20402.

b. Department of the Army, Corps of Engineers, "General Safety Requirements", which may be examined in the office where bids are being received. This manual is now out of print and is unobtainable from Government sources.

c. NAVFAC 4330/5, Additional General Provisions, Clause 41.

18. DISPOSAL OF MATERIALS AND DEBRIS: All excess spoil from earthwork, debris, trees, logs, brush, trash, and other materials shall be removed from the limits of the Base and disposed of by the Contractor.

19. WRITTEN GUARANTEES AND GUARANTOR'S LOCAL REPRESENTATIVE: Prior to completion of the contract, the Contractor shall obtain and furnish to the OICC's designated representative written guarantees for all the equipment and/or appliances furnished under the contract. The Contractor shall furnish with each guarantee: The name, address, and telephone number of the guarantor's representative nearest to the location where the equipment and/or appliances are installed, who, upon request of the Using Service's representative, will honor the guarantee during the guaranty period and will provide the services prescribed by the terms of the guarantee.

20. PAYMENT FOR MATERIALS OFF-SITE: Payments may also be made for materials stored off construction sites, but in reasonable proximity thereto upon specific request from the Contractor. As a condition precedent to such payments, the OICC must be satisfied that: (1) the materials are stored in reasonable proximity to the construction site, so that transportation and attendant hazards are minimized; (2) the Contractor demonstrates clear title (paid invoices) to such material; (3) the materials for which progress payments are requested are adequately insured and protected from theft and the elements through appropriate security measures; and (4) the materials for which progress payments are requested are not susceptible to deterioration or physical damage in storage or in transit to the job site (e.g., items such as steel, machinery, pipe and fittings, electrical cable, etc., would be acceptable for progress payments; items such as sheetrock, glass, insulation, wall coverings, etc., would not). Payments will not be made for materials in transit.

21. TRAILER OR STORAGE BUILDINGS will be permitted on the job site, where space is available, subject to the approval of the OICC. The trailers or buildings shall be suitably painted and kept in a good state of repair. Failure of the Contractor to maintain his trailers or storage

buildings in good condition will be considered sufficient reason to require their removal from the job site.

END OF SECTION 1A

SECTION 1B. ADDITIONAL GENERAL PARAGRAPHS

1. FORM OF CONTRACT: The contract will be executed on Standard Form 23, January 1961 edition, Construction Contract, and will include NAVFAC 4330/41 (12-73), Labor Standards Provisions; Standard Form 23-A, October 1969 edition, General Provisions; and form NAVFAC 4330/5, (Revised 12-73), Additional General Provisions.

The first sentence of subparagraph (a) of Clause 19 of Standard Form 23-A is amended by deleting the words "and Executive Order 10582, December 17, 1954 (3 CFR Supp., 1954-58 Comp., P-230)"

In Clause 21, immediately following the preamble, delete the Equal Opportunity Clause and substitute the following clause with the added footnote:

21. EQUAL OPPORTUNITY: (1972 AUG) (This clause applied only to employees recruited in the Continental United States)

(a) Certification of nonsegregated facilities. By the submission of this bid, the bidder, offeror, applicant, or subcontractor certifies that he does not maintain or provide for his employees any segregated facilities at any of his establishments, and that he does not permit his employees to perform their services at any location, under his control, where segregated facilities are maintained. He certifies further that he will not maintain or provide for his employees any segregated facilities at any of his establishments, and that he will not permit his employees to perform their services at any location, under his control, where segregated facilities are maintained. The bidder, offeror, applicant or subcontractor agrees that a breach of this certification is a violation of the Equal Opportunity Clause in this contract. As used in this certification, the term "segregated facilities" means any waiting rooms, work areas, rest rooms and wash rooms, restaurants and other eating areas, time clocks, locker rooms and other storage or dressing areas, parking lots, drinking fountains, recreation or entertainment areas, transportation, and housing facilities provided for employees which are segregated by explicit directive or are in fact segregated on the basis of race, creed, color, or national origin, because of habit, local custom or otherwise. He further agrees that (except where he has obtained identical certifications from proposed subcontractors for specific time periods) he will obtain identical certifications from proposed subcontractors prior to the award of subcontracts exceeding $10,000 which are not exempt from the provisions of Equal Opportunity clause; that he will retain such certifications in his files; and that he will forward the following notice to such proposed subcontractors (except where the proposed subcontractors have submitted identical certifications for specific time periods):

NOTICE TO PROSPECTIVE SUBCONTRACTORS OF REQUIREMENT FOR CERTIFICATIONS OF NONSEGREGATED FACILITIES.

A certification of Nonsegregated Facilities, as required by the May 9, 1967 order on Elimination of Segregated Facilities, by the Secretary of Labor (32 Fed. Reg. 7439, May 19, 1967) must be submitted prior to the award of a subcontract exceeding $10,000 which is not exempt from the provisions of the Equal Opportunity clause. The certification may be submitted either for each subcontract or for all subcontracts during a period (i.e., quarterly, semiannually, or annually). (Mar. 1968) (Note: The penalty for making false statements in offers is prescribed in 18 U.S.C. 1001).

(b) Certification of nonsegregated facilities by subcontractors and federally assisted construction contractors (Mar. 1968). Prior to the award of any subcontract, required to contain the Equal Opportunity clause contained in this contract, the Contractor shall obtain the certification set forth in 2-201(a) (xli). This certification may be required by the Contractor, either for each subcontract or for all subcontracts during a period (i.e., quarterly. semiannually, o. annually).

(c) During the performance of this contract, the Contractor agrees as follows:

(1) The Contractor will not discriminate against any employee or applicant for employment because of race, color, religion, sex, or national origin. The Contractor will take affirmative action to ensure that applicants are employed, and that employees are treated during employment, without regard to their race, color, religion, sex, or national origin. Such action shall include but not be limited to the following: Employment, upgrading, demotion, or transfer, recruitment or recruitment advertising; layoff or termination; rates of pay or other forms of compensation; and selection for training, including apprenticeship. The Contractor agrees to post in conspicuous places, available to employees and applicants for employment, notices to be provided by the Contracting Officer setting forth the provisions of this nondiscrimination clause.

(2) The Contractor will, in all solicitations or advertisements for employees placed by or on behalf of the Contractor, state that all qualified applicants will receive consideration for employment without regard to race, color, religion, sex, or national origin.

(3) The Contractor will send to each labor union or representative of workers with which he has a collective bargaining agreement or other contract or understanding, a notice to be provided by the agency Contracting Officer, advising the labor union or workers' representative of the contractor's commitments under this Equal Opportunity clause and shall post copies of the notice in conspicuous places available to employees and applicants for employment.

(4) The Contractor will comply with all provisions of Executive Order 11246 of September 24, 1965, as amended by Executive Order 11375 of October 13, 1967, and of the rules, regulations, and relevant orders of the Secretary of Labor.

(5) The Contractor will furnish all information and reports required by Executive Order 11246 of September 24, 1965, as amended by Executive Order 11375 of October 13, 1967, and by the rules, regulations, and orders of the Secretary of Labor or pursuant thereto, and will permit access to his books, records, and accounts by the contracting agency and the Secretary of Labor for purposes of investigation to ascertain compliance with such rules, regulations, and orders.

(6) In the event of the Contractor's noncompliance with the Equal Opportunity clause of this contract or with any of such rules, regulations, or orders, this contract may be cancelled, terminated or suspended in whole or in part, and the Contractor may be declared ineligible for further Government contracts in accordance with procedures authorized in Executive Order 11246 of September 24, 1965, as amended by Executive Order 11375 of October 13, 1967, and such other sanctions may be imposed and remedies invoked as provided in Executive Order 11246 of September 24, 1965, as amended by Executive Order 11375 of October 13, 1967, or by rule, regulation, or order of the Secretary of Labor, or as otherwise provided by law.

(7) The Contractor will include the provisions of Paragraph (1) through (7) in every subcontract or purchase order unless exempted by rules, regulations, or orders of the Secretary of Labor issued pursuant to Section 204 of Executive Order 11246 of September 24, 1965, as amended by Executive Order 11375 of October 13, 1967, so that such provisions will be binding upon each subcontractor or vendor. The Contractor will take such action with respect to any subcontract or purchase order as the contracting agency may direct as a means of enforcing such provisions including sanctions for non-compliance: Provided, however, that in the event the Contractor becomes involved in, or is threatened with, litigation with a subcontractor or vendor as a result of such direction by the contracting agency, the Contractor may request the United States to enter into such litigation to protect the interests of the United States.

The following additional footnote is added to Clause 21 of Standard Form 23-A: "In accordance with regulations of the Secretary of Labor, the rules, regulations, orders, instructions, designations, and other directives issued by the President's Committee on Equal Employment Opportunity and those issued by the heads of various department of agencies under or pursuant to any of the Executive Orders superseded by Executive Order 11246, shall, to the extent that they are not inconsistent with Executive Order 11246, remain in full force and effect unless and until revoked or superseded by appropriate authority. References in such directives to provisions of the superseded orders shall be deemed to be references to the comparable provisions of Executive Order 11246.

Clause 41, NAVFAC 4330/5, at the end of paragraph (d), delete the following: "If the contract involves more than 6 months work or is described as hazardous character in the Invitation for Bids, Schedule, or Specifications, the following paragraph (e) will apply."

Clause 66. Value Engineering Incentive (1971 MAY). Delete this clause in its entirety and substitute the following therefor:

Clause 66. VALUE ENGINEERING INCENTIVE (1974 APR)

(a) Application. This clause applies to a Contractor developed and documented Value Engineering Change Proposal (VECP) which:

(i) requires a change to this contract to implement the VECP; and

(ii) reduces the contract price without impairing essential function or characteristics, provided that it is not based solely on a change in deliverable end item quantities.

(b) Documentation. As a minimum, the following information shall be submitted by the Contractor with each VECP:

(i) a description of the difference between the existing contract requirement and the proposed change, and the comparative advantages and disadvantages of each; justification where function or characteristics of a work item is being altered; and the effect of the change on the performance of the end item;

(ii) an analysis and itemization of the requirements of the contract which must be changed if the VECP is accepted and a recommendation as to how to make each such change (e.g., a suggested specification revision);

(iii) a separate detailed cost estimate for both the existing contract requirement and the proposed change to provide an estimate of the reduction in costs, if any, that will result from acceptance of the VECP, taking into account the costs of development and implementation by the Contractor (including any amount attributable to subcontracts in accordance with paragraph (f) below;

(iv) a prediction of any effects the proposed change would have on related costs to the Military Department such as Government furnished property costs, and costs of maintenance and operation;

(v) a statement of the time by which a change order adopting the VECP must be issued so as to obtain the maximum cost reduction during the remainder of this contract, noting any effect on the contract completion time or delivery schedule; and

(vi) identification of any previous submission of the VECP, including the dates submitted, the agencies involved, and the previous actions by the Government, if known.

(c) Submission. To expedite a determination, VECPs shall be submitted to the Resident Engineer at the worksite with a copy to the Contracting Officer. Proposals shall be processed expeditiously; however, the Government shall not be liable for any delay in acting upon any proposal submitted pursuant to this clause. The Contractor has the right to withdraw, in whole or in part, any VECP at any time prior to acceptance by the Government.

(d) Acceptance. The Contracting Officer may accept, in whole or in part, by contract modification any VECP submitted pursuant to this clause. The Contracting Officer may accept the VECP even though an agreement on price reduction has not been reached, by issuing the Contractor a notice to proceed with the change. Until a notice to proceed is issued or a contract modification applies a VECP to this contract, the Contractor shall remain obligated to perform in accordance with this contract. Contract modifications made as a result of the clause will state that they are made pursuant to it. The decision of the Contracting Officer as to the acceptance of any VECP under this contract shall be final and shall not be subject to the "Disputes" clause of this contract.

(e) Sharing. If a VECP submitted by the Contractor pursuant to this clause is accepted, the contract price shall be adjusted without regard to profit in accordance with the following provisions:

(i) Definition:

(A) Instant contract savings to the Contractor (ICS) are the estimated reduction in the Contractor's cost of performance resulting from the acceptance of the VECP. The proposed cost reduction includes estimated allowable Contractor development and implementation costs (CC). The Contractor's development and implementation costs include any subcontractor development and implementation costs (see (f) below). For purposes of this clause, Contractor development costs are those costs incurred after the Contractor has identified a specific VE project and prior to acceptance and implementation by the Government.

(B) Government Costs (GC) are thos DOD costs which directly result from development and implementation of the VECP, such as test and evaluation of the VECP.

(ii) Calculations and Actions. Multiply ICS by 45% and GC by 55%. Add these two results, e.g., (.45 ICS + .55 GC) and subtract from the contract price.

(f) Subcontracts. The Contractor shall include appropriate VE arrangements in any subcontract of $50,000 or greater, and may include such arrangements in contracts of lesser value. To compute any adjustment in the contract price under paragraph (e) above, the Contractor's cost of development and implementation of a VECP which is accepted under

this contract shall include any development and implementation costs of a subcontractor, and any VE incentive payments to a subcontractor, which clearly pertain to such VECP. However, no such payment or accrual to a subcontractor will be permitted, either as a part of the Contractor's development or implementation costs or otherwise, to reduce the Government's share.

(g) Data. The Contractor may restrict the Government's right to use any sheet of a VECP or of the supporting data, submitted pursuant to this clause, in accordance with the terms of the following legend if it is marked on such sheet:

> "This data furnished pursuant to the Value Engineering Incentive clause of contract _____ shall not be disclosed outside the Government, or duplicated, used or disclosed in whole or in part, for any purpose other than to evaluate a VECP submitted under said clause. This restriction does not limit the Government's right to use information contained in this data if it is or has been obtained, or is otherwise available, from the Contractor or from another source, without limitations. If such a VECP is accepted by the Government under said contract after the use of this data in such an evaluation, the Government shall have the right to duplicate, use, and disclose any data reasonably necessary to the full utilization of such VECP as accepted, in any manner and for any purpose whatsoever, and have others so do."

In the event of acceptance of a VECP, the Contractor hereby grants to the Government all rights to use, duplicate or disclose, in whole or in part, in any manner and for any purpose whatsoever, and to have or permit others to do so, any data reasonably necessary to fully utilize such VECP.

(h) VALUE ENGINEERING COST COMPUTATION (1-75)

In computing the instant contract savings to the Contractor (ICS), under Clause 66, "Value Engineering Incentive (1974 Apr)", there shall not be taken into consideration any Value Engineering incentive payments which the Contractor may make to the subcontractor, i.e., such amounts will not be deemed a development and implementation cost at any tier.

(End of clause)

To NAVFAC 4330/5, add the following new clause:

"100. EQUITABLE ADJUSTMENTS: WAIVER AND RELEASE OF CLAIMS

"(a) Whenever the Contractor, after receipt of notification of a change made pursuant to the clause of this contract entitled "Changes" or after affirmation of a constructive change thereunder, submits any claim for equitable adjustment under that clause, such claim shall

include all types of adjustments in the total amounts to which that clause entitles the Contractor, including but not limited to adjustments arising out of delays or disruptions or both caused by such change. Except as the parties may otherwise expressly agree, the Contractor shall be deemed to have waived (i) any adjustments to which it otherwise might be entitled under the aforesaid clause where such claim fails to request such adjustments, and (ii) any increase in the amount of equitable adjustments additional to those requested in its claim."

"(b) Further, the Contractor agrees that, if required by the Contracting Officer, he will execute a release, in form and substance satisfactory to the Contracting Officer, as part of the supplemental agreement setting forth the aforesaid equitable adjustment, and that such release shall discharge the Government, its officer, agents and employees, from any further claims, including but not limited to further claims arising out of delays or disruptions or both, caused by the aforesaid change."

Make the following changes in NAVFAC 4330/37:

Clause 14. CONTRACTS AND BONDS

In the third line from bottom of the clause, after "run", change the word "five" to read "fifteen".

2. PERFORMANCE AND PAYMENT BONDS, executed on Standard Form 25, June 1967 edition, Performance Bonds, and Standard Form 25-A, June 1964 edition, Payment Bond, will be required as stipulated in Standard Form 22 and NAVFAC 4330/37. The performance bond shall specifically provide coverage for taxes imposed by the United States which are collected, deducted, or withheld from wages paid by the Contractor in carrying out the contract with respect to which such bond is furnished.

3. METHODS AND SCHEDULES OF PROCEDURES: The work shall be executed in a manner and at such times that will cause the least practicable disturbance to the occupants of the buildings and the normal activities of the station. Before starting any work, the sequence of operations and the methods of conducting the work shall have been approved by the Officer in Charge of Construction (OICC).

4. APPROVAL OF SAMPLES, CUTS, AND DRAWINGS: Matter submitted for approval shall be accompanied by complete information concerning the material, articles, and/or design proposed for use in sufficient detail to show compliance with the specification, and shall be approved before incorporation into the work. Approval thereof will not be construed as relieving the Contractor of compliance with the specification, even if such approval is made in writing, unless the attention of the OICC is called to the noncomplying features by letter accompanying the submitted matter. Partial submittals or submittals of less than the whole of any system made up of interdependent components, will not be considered.

Approval of drawings, cuts, and samples by the OICC shall not be construed as a complete check or approval of the detailed dimensions, weights, gauges and similar details of the proposed articles. The conformance of such details with the contract requirements, together with the necessary coordination of dimensions and details between the various elements of the work and between the various subcontractors and suppliers, shall be solely the responsibility of the Contractor, approval of submitted matter notwithstanding.

5. OPERATION OF STATION UTILITIES: The Contractor shall not operate nor disturb the setting of any control devices in the station utilities system, including water, sewer, electrical and steam services. The Government will operate the control devices as required for normal conduct of the work. The Contractor shall notify the OICC giving reasonable advance notice when such operation is required.

6. CHANGED CONDITIONS: Wherever changed conditions as defined in Clause 4 of Standard Form 23-A are encountered, and wherever conditions exposed during the course of the work necessitate a change from quantities indicated or specified as either estimated quantities or as a basis for bids, whether or not provision for a change in price for such variation is specified, the OICC must be notified in writing and written directions to do so must be obtained before quantities stated in the contract documents are exceeded.

7. PROTECTION AND REPAIRS: The Contractor shall comply with the fire prevention requirements, security rules, and regulations of the activity; and shall provide approved means necessary for the protection of all Government and private property, including contents of buildings affected directly or indirectly by his operations. All damage to Government or private property, resulting directly or indirectly from the Contractor's actions, shall be made good by him without expense to the Government.

8. EXISTING WORK damaged or otherwise affected by the Contractor's operations shall be restored to a condition as good as existed before the work was commenced, except where indicated or specified otherwise. Where new construction adjoins, connects to, or abuts the existing work, the junction shall be made in a substantial workmanlike and weathertight manner as the case requires. All new work shall match, as nearly as practicable, the existing adjoining and/or adjacent similar work unless indicated or specified otherwise. Except where specifically designated as being retained by the Government or to be reinstalled in the new construction, all materials, fixed equipment, and debris resulting from demolition and removal operations, shall be removed by the Contractor from the limits of the Government reservation at such times during the progress of the work as directed.

9. PAYROLLS AND AFFIDAVITS: The Prime Contractor, subcontractor, and sub-subcontractor will be required to submit a copy of each weekly payroll together with a Contractor's Weekly Satement of Compliance

covering the payroll to the Officer in Charge of Construction (OICC) within seven days after the regular payment date of the payroll period. The receipt of these payrolls and statements is made a condition precedent to payment for any amounts due under the contract.

9.1 Payroll: The payroll shall be identified by the name of the Contractor, contract number, and the location of the site of the work. Payrolls shall state accurately and completely for each employee, his name, classification, social security number, rate of pay, daily and weekly hours worked, wages earned, all deductions from such wages and the actual weekly wages paid. Contractors are required to submit employee's address with the payroll on which the employee's name first appears.

9.2 Contractor's Weekly Statement of Compliance shall be executed on the form furnished for the purpose of the OICC. Contractors shall list by title or name, all deductions made, omitting from the listing the dollar amount of the deductions.

9.3 A Sworn Affidavit accomplished by the Contractor, stating that he and his subcontractors have complied with the labor standards provisions of the contract, must accompany each request for reimbursement. Affidavit form will be furnished by the OICC.

10. SUBCONTRACTORS AND PERSONNEL: Promptly after the award of the contract, the Contractor shall submit to the Officer in Charge of Construction (OICC), in triplicate, a list of his subcontractors and the work each is to perform. On this form shall appear the names of the key personnel of the Contractor and subcontractors, together with their home addresses and telephone numbers, for use in event of any emergency. From time to time as changes occur and additional information becomes available, the Contractor shall amplify, correct, and change the information contained in previous lists.

11. STORM PROTECTION: Should warnings of winds of gale force or stronger be issued, the Contractor shall take every practicable precaution to minimize danger to persons, to the work, and to adjacent property. These precautions shall include closing all openings, removing all loose materials, tools and/or equipment from exposed locations; and removing or securing scaffolding and other temporary work.

12. SAFETY REQUIREMENTS: A copy of the Department of the Army, Corps of Engineers, "General Safety Requirements", referenced in Clause 41 of form NAVFAC 4330/5, may be examined in the office where the bids are being received. Prior to starting the work, the Contractor shall meet in conference with representatives of the OICC to discuss and develop mutual understandings relative to administration of the safety program.

13. AS-BUILT DRAWINGS: On completion of the work, one print of each of the drawings accompanying this specification shall be neatly and clearly marked in red to show all variations between the construction actually provided and that indicated or specified in the contract documents,

and delivered to the OICC. The Contractor shall also mark the drawings to indicate the exact location of any underground utility lines discovered in the course of the work. Where a choice of materials and/or methods is permitted herein, and where variations in the scope or character of the work from the entire work indicated or specified are permitted either by award on bidding items specified for that purpose or by subsequent change to the contract, the as-built drawings shall define the construction actually provided. The representation of such variations shall conform to standard drafting practice and shall include such supplementary notes, legends, and details as may be necessary for legibility and clear portrayal of the as-built construction; the marked prints shall be subject to approval of the OICC before acceptance.

14. RESPONSIBILITY FOR TESTING: Where tests are specified to be made by the Government, the Government will make the initial tests at its expense. Should the initial samples fail to meet the requirements of the specifications, all succeeding tests of additional samples shall be made by an approved testing laboratory or agency at the expense of the Contractor.

15. SCHEDULE OF PRICES: Unless otherwise specified in the section entitled "General Paragraphs", upon receipt of a notice of award, the Contractor shall prepare a detailed breakdown of the contract price, giving the quantities of the various kinds of work and the unit and total prices therefor. This breakdown shall be submitted promptly to the OICC on form NAVDOCKS 83, revised August 1963, Schedule of Prices, in octuplicate. The forms will be furnished by, and shall be executed in a manner satisfactory to, the OICC. The submission of this breakdown will not affect the contract terms.

16. PRINTS FURNISHED TO CONTRACTOR: Six copies of the project specification, and six sets of the drawings accompanying the specification, will be furnished the Contractor. Additional sets of the specifications and drawings can be obtained, if required, by application to the OICC, providing that the need therefore is justified to the satisfaction of the OICC.

17. PRIORITIES, ALLOCATIONS, AND ALLOTMENTS: The Contractor agrees, in the procurement and use of materials required for the performance of this contract, to comply with the provisions of all applicable rules and regulations of the Business and Defense Services Administration, including Defense Materials System regulations. If the initial contract price hereunder does not exceed $100,000, this project is made a rated order pursuant to DMS Regulation 1 and is assigned DO rating C2 unless a higher rating is specified in the section entitled "General Paragraphs". The Contractor is hereby made a self-authorizing Contractor as defined in Section 3(g) of that regulation and is required to use the self-authorization provision of Section 9 in obtaining controlled materials, as well as products and materials other than controlled materials needed to fill this rated order.

18. LOCATION OF UNDERGROUND UTILITIES: Where existing piping, utilities, and underground obstructions of any type are indicated in locations to be traversed by new piping, ducts, and other work provided hereunder, and are not indicated or specified to be removed, the elevations of the existing utilities and obstructions shall be determined before the new work is laid closer than the nearest manhole or other structure at which an adjustment in grade could be made. For any additional work required by reason of conflict between the new and existing work, an adjustment in contract price will be made in accordance with Clause 4 of Standard Form 23-A.

19. AVAILABILITY OF UTILITY SERVICES: In accordance with Clause 56 of form NAVFAC 4330/5, as modified herein, electric and water service will be made available to the Contractor at the nearest available existing outlets at prevailing Government rates which may be obtained upon application to the Commanding Officer. The Contractor will be required to furnish all labor, equipment and materials to make utilities connections and to furnish and install valves, transformers, and meters for each service. The Contractor shall determine that each source is adequate and suitable for requirements of his equipment before making connection and on completion, shall reinstate all utility sources used to their original condition or a condition satisfactory to the Officer in Charge of Construction (OICC). No guaranty of any kind is made as to the continuity and level of the supply of such utility services. They will be reduced or suspended as the needs of the Government require and the Government shall not be liable for any damages sustained as a result of such reduction or suspension, nor for any failure of the supply lines to the Contractor's connections. Unless specified otherwise in section entitled "General Paragraphs", final connections to existing utilities shall be made by the Contractor under the direct supervision of Government personnel.

20. MINIMUM WAGE RATES AND OTHER LABOR STANDARDS: Any class of laborers and mechanics not listed in the Secretary's decision, which will be employed on the contract, shall be classified or reclassified by the Contractor or subcontractor conformably to the Secretary's decision, subject to the approval of the Contracting Officer. Mechanics and laborers shall be classified in conformance with prevailing practice. In the event of any difference between the Contractor and the Government concerning the proper wage rates to be paid, the classification of employees to conform to prevailing practice, the amount of wages due employees, or any other application or interpretation of the labor standards provisions of this contract, the difference shall be referred to the Contracting Officer (the Commander of the Naval Facilities Engineering Command or his specially authorized representative), and the Contracting Officer shall determine the matter with advice from and reports to the Secretary of Labor as required by the Department of Labor regulations. This determination shall not be appealable under the Disputes clause, and the Contractor shall comply promptly with the determination of the

Contracting Officer. If the Contracting Officer determines that the Contractor has not satisfied his obligations under the labor standards provisions of the contract, the Contracting Officer will forward a report on the violations to the Department of Labor and the Comptroller General for appropriate action.

20.1 Investigation of labor conditions: The wage determination decision of the Secretary of Labor attached hereto, or included by addendum, is made a part of this contract solely for the purpose of setting forth the minimum hourly wage rates required to be paid by the Davis-Bacon Act and is not to be considered as a guaranty, warranty or representation as to the wage determination decision, the wage rates therein, the prevailing wages, or the availability of labor at the wate rates indicated. Bidders are advised to make their own investigations and to rely solely upon their own information as to local labor conditions, such as wage rates necessary to attract labor, the length of the workday and workweek, overtime compensation, health and welfare contributions and available labor supply, and as to prospective changes or adjustments of wage rates or employment conditions in the area concerned that might affect the operations under the contract. Neither a mistake in attaching the wage determination decision of the Secretary of Labor or in the determination or statement of the wage rates set forth therein shall entitle the bidder to the cancellation of his bid or contract, to an increase in the contract price, or to other additional payment or recovery.

20.2 Apprentices employed pursuant to the wage determination decision contained in this contract must be registered in a bona fide apprenticeship program registered with a state apprenticeship council recognized by the Federal Committee on Apprenticeship, Department of Labor, or if no such recognized council exists in a state, a program registered with the Bureau of Apprenticeship, Department of Labor. The ratio of apprentices to journeyman mechanics shall not exceed that recognized by the agency of registry as prevailing.

20.3 Posting of wage rates: Where compliance with Clause 1 of NAVFAC 4330/41 requires posting the wage determination decision in an exterior location, it shall, along with other documents required to be similarly posted, be displayed in a weatherproof display case.

21. NORTH CAROLINA SALES AND USE TAX

(a) As used throughout this clause, the term "materials" means building materials, supplies, fixtures and equipment which become a part of or are annexed to any building or structure erected, altered, or repaired under this contract.

(b) If this is a fixed-price type contract as defined in the Armed Services Procurement Regulation, the contract price includes North Carolina sales and use taxes to be paid with respect to materials, notwithstanding any other provision of this contract. If this is a cost-reimbursement type contract as defined in such regulation, any North Carolina sales and use taxes paid by the Contractor with respect to materials shall constitute an allowable cost under this contract.

(c) At the time specified in paragraph (d) below:

(i) The Contractor shall furnish the Contracting Officer certified statements setting forth the cost of the materials purchased from each vendor and the amount of North Carolina sales and use taxes paid thereon. In the event the Contractor makes several purchases from the same vendor, such certified statement shall indicate the invoice numbers, the inclusive dates of the invoices, the total amount of the invoices and the North Carolina sales and use taxes paid thereon. Such statement shall also include the cost of any tangible personal property withdrawn from the Contractor's warehouse stock and the amount of North Carolina sales or use tax paid thereon by the Contractor. The Contractor shall furnish such additional information as the Commissioner of Revenue of the State of North Carolina may require to substantiate a refund claim for sales or use taxes.

(ii) The Contractor shall obtain and furnish to the Contracting Officer similar certified statements by its subcontractors.

(d) If this contract is completed before the next July 1, the certified statements to be furnished pursuant to paragraph (c) above shall be submitted within 60 days after completion. If this contract is not completed before the next July 1, such certified statements shall be submitted on or before the 31st day of August of each year and shall cover taxes paid during the twelve month period which ended the preceding June 30.

(e) The certified statements to be furnished pursuant to paragraph (c) above shall be in the following form:

I hereby certify that during the period _____ to _____, (name of Contractor or subcontractor) paid North Carolina sales and use taxes aggregating $_____ with respect to building materials, supplies, fixtures and equipment which have become a part of or annexed to a building or structure erected, altered or repaired by (name of Contractor) for the United States of America, and that the vendors from whom the property was purchased, the dates and numbers of the invoices covering the purchases, the total amount of the invoices of each vendor, the North Carolina sales and use taxes paid thereon, and the cost of property withdrawn from warehouse stock and North Carolina sales or use taxes paid thereon are as set forth in the attachments hereto.

22. Quarantine for imported fire ant. That area of Onslow County bounded by a line beginning at the intersection of U.S. Highway 17 and the White Oak River, thence southeast along said river to Bogue Inlet, thence south along said inlet to the Atlantic Ocean, thence southwest along said ocean to its junction with New River Inlet, thence northwest along said inlet to its junction with New River, thence northwest along said river to its junction with North Carolina Highway 172, thence southwest and west along said highway to its junction with U.S. Highway 17, thence north and northeast along said highway to the point of beginning, has been declared a suppression area by the United States Department of Agriculture for imported fire ant. All of Carteret County and that part of Craven County where Marine Corps Air Station is located, likewise have been declared a suppression area by the same authority. Included in the Onslow County area is the entire Camp Lejeune reservation, including Camp Geiger and the Marine Corps Air Station (Helicopter), New River. Compliance with the quarantine regulations established by this authority as set forth in USDA Quarantine No. 81 dated 9 October 1970, is required for operations hereunder. Pertinent requirements of the quarantine for materials, originating on the Camp Lejeune reservation and the Marine Corps Air Station (Helicopter), New River, which are to be transported outside the Onslow County or adjacent suppression areas, include the following:

(a) Certification is required for the following articles, and they shall not be moved from the reservation to any point outside the Onslow County and adjacent suppression areas unless accompanied by a valid inspection certificate issued by an authorized imported fire ant inspector.

(1) Bulk soil.

(2) Used mechanized soil-moving equipment.

(3) Any other products, articles, or means of conveyance of any character whatsoever, not covered by sub-divisions (1) and (2), when it is determined by an inspector that they present a hazard of spread of the imported fire ant and the person in possession thereof has been so notified.

(b) Authorization for movement of equipment shall be obtained from the Officer in Charge of Construction (OICC), and requests for inspection shall be made sufficiently in advance of the date of movement to permit arrangements for the services of authorized inspectors. The equipment shall be prepared and assembled so that it may be readily inspected. Articles and materials requiring certification for movement shall be removed from the equipment by washing with water and such other means as necessary to accomplish complete removal. Resulting spoil shall be wasted as directed.

23. Quarantine for white fringed beetles. The entire Camp Lejeune reservation (including Camp Geiger) and the Marine Corps Air Station, New River, have been quarantined by the United States and North Carolina Departments of Agriculture for the white fringed beetle. Compliance with the quarantine regulations established by these authorities as set forth in the U.S.D.A. Quarantine No. 72 and North Carolina State Quarantine No. 7 is required for operations hereunder. Pertinent requirements of the quarantines include the following:

(a) Certification is required for the following articles and they shall not be moved from the reservation unless accompanied by a valid inspection certificate issued by an authorized white fringed beetle inspector.

(1) Soil, sand, or gravel moved independently or attached to other articles, such as heavy equipment, including drag lines, road-grading machines, ditch diggers, bulldozers, and equipment with tracks or cleats.

(2) Nursery stock, plants and sod.

(3) Scrap metal.

Authorization for movement of equipment shall be obtained from the Officer in Charge of Construction (OICC), and requests for inspection shall be made sufficiently in advance of the date of movement to permit arrangements for the services of authorized inspectors. The equipment shall be prepared and assembled so that it may be readily inspected. Articles and materials requiring certification for movement shall be removed from the equipment by washing with water and such other means as necessary to accomplish complete removal. Resulting spoil shall be wasted as directed.

24. Emergency Medical Care. Only emergency medical care is available by Government facilities at Marine Corps Base, Camp Lejeune to Contractor employees who suffer on-the-job injury or disease. Emergency care will be rendered at the prevailing rates established in BUMEDINST 6320.4 series. Reimbursement will be made by the Contractor to the Naval Regional Medical Center Collection Agent upon receipt of a monthly statement.

25. CERTIFICATE OF CURRENT COST OR PRICING DATA: (This paragraph is to be used when certification of cost or pricing data is required in accordance with ASPR 3-807.3.) The Contractor shall submit to the Officer in Charge of Construction (OICC) a certificate in the form set forth below as soon as practicable after agreement is reached on the contract price:

CERTIFICATE OF CURRENT COST OR PRICING DATA

This is to certify that, to the best of my knowledge and belief, cost or pricing data as defined in ASPR 3-807.3(h) submitted, either actually or by specific identification in writing (see ASPR 3-807.3(i)), to the Contracting Officer or his representative in support of _____ _____* are accurate, complete, and current as of _____**.
day month year

Firm _____
Name _____
Title _____

_____***
Date of Execution

* Describe the proposal, quotation, request for price adjustment or other submission involved, giving appropriate identifying number (e.g., RFP No. _____).

** This date shall be the date when the price negotiations were concluded and the contract price was agreed to. The responsibility of the Contractor is not limited by the personal knowledge of the Contractor's negotiator if the Contractor had information reasonably available (see ASPR 3-807.5(a)) at the time of agreement, showing that the negotiated price is not based on accurate, complete, and current data.

*** This date should be as close as practicable to the date when the price negotiations were concluded and the contract price was agreed to.

END OF SECTION 1B

SECTION 1C. BIDS

1. INSTRUCTION TO BIDDERS, Standard Form 22, October 1969 edition; NAVFAC 4330/37(12-73), Additional Instructions to Bidders, and Invitation for Bids, Standard Form 20, January 1961 edition, shall be observed in the preparation of bids. Bidders shall affix their names and return addresses in the upper left corner of bid envelopes. Envelopes containing bids must be sealed.

2. BID GUARANTY will be required as stipulated in Standard Form 22 and NAVFAC 4330/37.

3. ITEMS OF BIDS. Bids shall be submitted, in duplicate, on Standard Form 21, December 1965 edition, Bid Form, with Standard Form 19-B, Representations and Certifications, October 1969 edition, and in accordance with Standard Forms 20 and 22, and NAVFAC 4330/37 upon the following items:

BASE BID. Price for the entire work, complete, in accordance with the drawings and specification, but excluding all work described in Additive Item No. 1

ADDITIVE ITEM NO. 1. Price for adding all work in connection with Well M-244. This work includes site work, piping, new well house and equipment, new well, and electrical, complete, in accordance with the drawings and specification.

NOTE: Evaluation of Bids. The funds available for this project, known as the control amount, will be recorded prior to bid opening and announced at bid opening. The low bidder for purposes of award shall be determined in accordance with the provision of this solicitation entitled "Additive or Deductive Items, Clause 21 of Form NAVFAC 4330/37, Additional Instruction to Bidders".

4. TELEGRAPHIC MODIFICATIONS OF BIDS in accordance with Standard Form 22 may be made. Two signed copies of the telegram in a sealed envelope marked "Copies of telegraphic modification of bid for Replace Water Wells M-627 and M-244, Montford Point, Marine Corps Base, Camp Lejeune, North Carolina, Specification No. 05-75-5109" should be forwarded immediately to the office to which the written bids were submitted.

5. REFERENCE TO AMENDMENTS: Each bidder shall refer in his bid to all amendments to this specification; failure to do so may constitute an informality in the bid.

END OF SECTION 1C

R. A. EARNST, CDR, CEC, USN
Officer in Charge of Construction
22 April 1975

DIVISION 2 SITE WORK

SECTION 2A EARTHWORK
2B ESTABLISHING VEGETATION
2C DEMOLITION

SECTION 2A EARTHWORK

2A.1 Applicable publications. The following publications of the issues listed below, but referred to elsewhere by basic designation only, form a part of this specification to the extent indicated by the references thereto (where a number is suffixed to the specification number, it denotes the effective amendment to the specification):

2A.1.1 Non-Government Specifications and Standards:

American Association of State Highway Officials (AASHO):

T99-70	Moisture density relations of soils, 5.5 lb. rammer.
T191-60	Density of soil in place by the sand cone method.
T205-64	Density of soil in place by the rubber ballon method.

American Society for Testing and Materials.

D 694-71	Specification for crushed stone, crushed slag, and crushed gravel for dry-bound or water bound macadam base course

2A.2 Quality Control. See Paragraph entitled "Tests" hereinafter.

2A.3 Requirements. The work includes the clearing and the excavation, filling, backfilling, and grading indicated and necessary for proper completion of the project.

2A.3.1 General. Bids shall be based on the following:

(a) that the surface elevations are as indicated;

(b) that no pipes or other artificial obstructions, except those indicated, will be encountered; and

(c) that hard material will not be encountered.

In case the actual conditions differ substantially from those stated or shown, or both, the provisions of the contract respecting an adjustment for changed conditions, shall apply, subject to the requirements of notification thereunder being given. Hard material shall be defined as solid ledge rock, firmly cemented unstratified masses or conglomerate deposits possessing the characteristics of solid rock not ordinarily removed without systematic drilling and blasting, and any boulder, masonry, or concrete except pavement, exceeding 1/2 cubic yard in volume.

2A.3.2 Clearing. All trees, logs, shrubs, and brush within the indicated clearing limits shall be removed, except as indicated otherwise. Trees and shrubs which are not to be cut shall be properly protected from damage. Bushes, roots and matted roots shall be grubbed out at least 18 inches below the existing surface. Brush, refuse, stumps, roots, and timber shall be removed from the limits of the station.

2A.3.3 Topsoil. Existing topsoil shall be stripped to a depth of 4 inches, stockpiles separately from other excavated materials, and shall be reused for finished surface grading. Topsoil shall be free of stones, wood matter, cuttings, excessive quantities of vegetation, and debris of every kind. Piles of topsoil shall be located so that the material can be used readily for finished surface grading; topsoil shall be protected and maintained until needed. The top 4-inch thickness of all newly graded earth surfaced areas shall consist of topsoil. If there is insufficient topsoil available to form the 4-inch thickness, that available shall be utilized as directed. The Contractor will not be required to haul in additional topsoil if all requirements specified are complied with. Placing of topsoil is specified in the section entitled "Establishing Vegetation".

2A.3.4 Excavations shall be carried to the depths, contours and dimensions indicated or necessary. Excavations shall be kept free from water while construction therein is in progress.

2A.3.4.1 Excavations for structures and trenches. Excavations carried below the depths indicated, without specific directions of the OICC, shall be refilled to the proper grade with suitable material and compacted thoroughly, except that in excavations for footings the concrete shall be extended to the bottom of the excavations; all additional work of this nature shall be at the Contractor's expense. Trenches for pipe lines shall be excavated along straight lines and, unless indicated otherwise, shall provide a minimum of 6 inches between the outside of the pipe bell and the sides of the trench or bracing. Standard pipe trench excavation and bedding shall be in accordance with the Standard Pipe Trench Bedding details given at the end of this section. Pipe, except cast iron or steel shall have its bottom quadrant for the full length of the barrel embedded in undisturbed earth, or, where rock trench occurs, on a thoroughly compacted layer of approved fill of a minimum thickness of 4 inches placed over the bottom of rock trench. Mechanical excavation, other than in rock, shall be held at least 2 inches above final invert grade. The remainder of the excavation shall be shaped manually and graded to provide uniform bearing on compacted soil, immediately before the pipe is laid.

2A.3.4.2 Excavation under new concrete slabs. The entire area of the original ground under new concrete slabs shall be excavated to remove all vegetable matter, topsoil,sod, muck, rubbish, and other unsuitable material to a minimum depth of 6 inches. In the event that the Contractor is directed by the OICC to remove unsuitable material to a greater depth than specified

an adjustment in the contract price or time for completion, or both, will be made in accordance with the contract.

2A.3.4.3 Shoring and sheeting. Excavations shall be shored and sheeted with members of sizes and arrangements sufficient to prevent injury to persons, damage to structures, injurious caving, or erosion. Shoring, sheeting, and bracing shall be removed as the excavations are backfilled; care shall be exercised to prevent injurious caving during the removal of the shoring and sheeting.

2A.3.5 Borrow materials for incorporation into subgrades shall be obtained from the station borrow pit located within a haul distance of 5 miles from the site of the work. The Contractor, at his expense, shall perform any clearing, grubbing, and stripping required for providing access to suitable borrow material and shall dispose of materials from clearing and grubbing operations off the station. The borrow pit shall be trimmed neatly and graded to drain properly.

2A.3.6 Drainage of construction sites. It shall be the Contractor's responsibility to adequately and completely drain construction sites as required to keep subgrades and subsoils sufficiently dry to permit all construction operations to successfully progress during all periods in which work is in progress. In addition to permanent drainage features required, the Contractor shall provide all necessary additional temporary ditches, swales, and other drainage features and equipment required to maintain the soils dry during construction. Where the Contractor's operations or failure to comply with the above requirements results in the development of unsuitable working platforms for equipment operation and unsuitable soil support for subsequent construction features, the Contractor, shall, at his expense, remove the unsuitable material to whatever depth is required to restore suitable working platforms and soil support and replace it with suitable material from sources outside the station.

2A.3.7 Filling and backfilling.

2A.3.7.1 Filling and backfilling for structures and trenches. All fill and backfill shall be free from roots, wood or other scrap material, and other vegetable matter and refuse. Fill and backfill shall be placed in layers not more than 6 inches thick, except as specified otherwise herein, and each layer shall be compacted thoroughly and evenly. Backfill about structures shall be placed, as far as practicable, as the work of construction progresses. Backfilling of trenches shall progress as rapidly as the construction and testing of the work permits. In backfilling pipe trenches, approved fill shall be complacted in 6-inch layers to a depth of one foot over the top of the pipe; the remainder of the trench shall be backfilled in well-compacted one-foot layers.

2A.3.8 Compaction. The subgrade of soils in cut shall have a density of 95 percent of the maximum density to a depth of 12 inches below the

subgrade surface. If the desnity of the existing material is less than 95 percent, it shall be compacted to a depth of 12 inches to the minimum 95 percent density. Fill and backfill under concrete floor slabs shall be compacted to not less than 100 percent of the maximum denisty for cohesionless materials and 95 percent of the maximum density for other materials; under grassed areas to 85 percent; and other backfill adjacent to structures to 90 percent. The moisture content of the specified densities shall be within 2 percent more or less than the optimum.

2A.3.9 Grading. The Contractor shall perform all grading in the areas so indicated or specified. Fill shall be brought to finished grades indicated within a tolerance of one-tenth of a foot and shall be graded to drain away from structures. Existing grades which are to remain and which are disturbed by the Contractor's operations shall be graded to provide surfaces suitable for the proper use of mowing machines.

2A.3.10 Stone Drives. Stone drives shall be crushed stone conforming to ASTM D694 with a Los Angeles abrasion not exceeding 55. Gradation shall be as follows:

Sieve Designation	Percentage by weight passing
1½ inches	100
1 inch	80-95
½ inch	60-75
No. 4	40-55
No. 10	28-43
No. 40	15-27
No. 200	5-12

Materials shall be spread uniformly on the subgrade to a thickness such that when compacted it will have a completed thickness not less than indicated. Material shall be so handled that it will not segregate and shall not be spread on a wet subgrade. Material shall be compacted by rolling to 100 percent of maximum density. The entire surface, after compaction, shall be smooth and true to grade.

2A.3.11 Disposition of surplus material. Surplus soil material not required for filling, backfilling, or grading shall be wasted by deposition on Government property within 5 miles of the site of the work, where directed by the OICC. Wasted material shall be spread and leveled by the OICC.

2A.4 Tests.

2A.4.1 Laboratory and field density tests will be made by the Government.

2A.4.1.1 Laboratory density tests shall be performed in accordance with Method D, AASHO method T99, with the following modifications; (1) all material passing a 2 inch sieve and retained on a 3/4 inch sieve shall be removed and replaced with an equal portion of material between the No. 4 and 3/4 inch sieves, and (2) a separate batch of material shall be used for each compaction test specimen. No material shall be reused for compaction tests. At least one test representing each type of material to be compacted shall be performed.

2A.4.1.2 Field density tests shall be performed in accordance with AASHO T191 or T205. At least one test representing each 5,000 square feet, or fraction thereof, in each lift of fill or backfill material, with a minimum of two tests per lift, shall be performed. At least one test representing each 5,000 square feet, or fraction thereof, shall be performed in subgrades for determining the existing in-place density. Individual tests shall be made to represent each type of construction involved, including subgrades and fill or backfill for buildings, trenches, and grassed areas. Tests shall be performed at each well site.

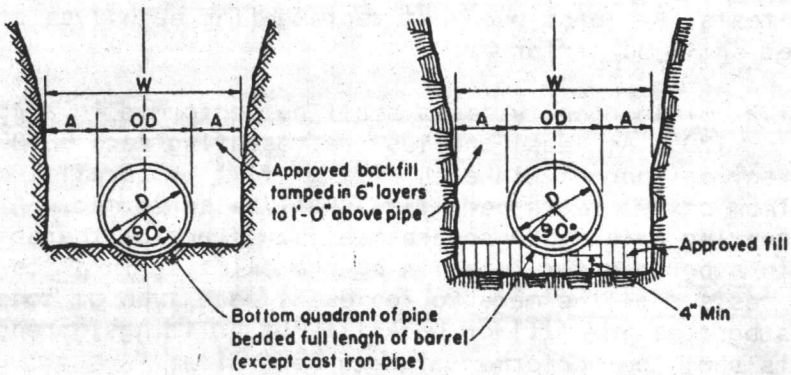

TRENCH IN EARTH

TRENCH IN ROCK

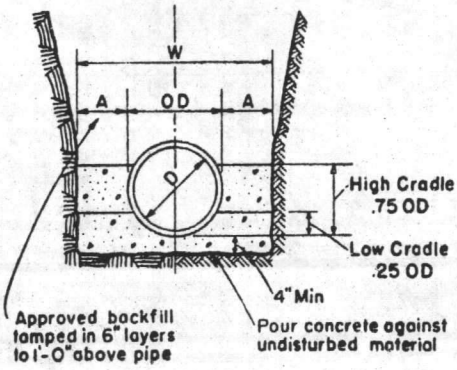

PIPE DIA "D"	MAXIMUM "A"
6" to 15"	8"
18" to 21"	10"
24" to 30"	12"
33" to 42"	15"
48" & Larger	18"

Maximum trench width "W" taken at top of pipe

Low Cradle = 160% } of earth trench
High Cradle = 200% } bearing value

CRADLE
(IN ROCK OR EARTH)

STANDARD PIPE TRENCH BEDDING

SECTION 2B ESTABLISHING VEGETATION

2B.1 General requirements. The work includes seedbed preparation, liming, fertilizing, seeding and mulching of all newly graded finish earth surfaces. The work also includes those areas inside or outside the limits of construction that are disturbed by the Contractor's operation.

2B.2 Materials.

2B.2.1 Lime shall be dolomitic agricultural-ground limestone containing not less than 10 percent magnesium oxide.

2B.2.2 Fertilizer shall be the standard commercial product of 10-10-10 analysis. All fertilizer shall be delivered in bags bearing the manufacturer's name, the chemical analysis of the product, and its weight. If not used immediately after delivery, fertilizer shall be stored in a manner that will not allow it to harden or destroy its effectiveness.

2B.2.3 Seed shall be new crop seed labeled in accordance with the U. S. Department of Agriculture, "Rules and Regulations under the Federal Seed Act". All seed shall be furnished in sealed standard containers. Seed which has become wet, moldy, or otherwise damaged prior to seeding, will not be acceptable.

2B.2.4 Mulch shall be any of the materials noted below:

(a) Grain straw or dry hay. Mulch material which contains an excessive quantity of matured seed of noxious weed or other species which would hinder the establishment of desirable vegetation will not be acceptable. Any mulch material which is fresh or excessively brittle or which is in an advanced stage of decomposition as to smother or retard growth of grass will not be acceptable.

(1) Asphaltic adhesive. Asphaltic material to anchor straw mulch shall be think enough to be blown from spray equipment. It shall be SS-1, RS-1, or RS-2 asphalt emulsion.

(b) Wood cellulose fiber mulch. Wood cellulose fiber mulch for use with the hydraulic application of grass seed and fertilizer shall consist of specially prepared wood cellulose fiber. It shall be processed in such a manner that it will contain no growth or germination inhibiting factors and shall be dyed an appropriate color to facilitate metering of materials. It shall be manufactured in such a manner that after addition and agitation in slurry tanks with fertilizers, grass seeds, water, and any other approved additives, the fibers in the material will become uniformly suspended to form a homogeneous slurry; that when hydraulically sprayed on the ground, the material will form a blotterlike ground cover impregnated uniformly with grass seed; which after application,

will allow the absorption of moisture and allow rainfall or mechanical watering to percolate to the underlying soil. Suppliers shall be prepared to certify that laboratory and field testing of their product has been accomplished, and that it meets all of the foregoing requirements based upon such testing. Weight specifications of this material from suppliers, and for all applications, shall refer only to air dry weight of the fiber material. Absolute air dry weight is based on the normal weight standard of the Technical Association of the Pulp and Paper Industry for wood cellulose and is considered equivalent to 10 percent moisture. Each package of the cellulose fiber shall be marked by the manufacturer to show the air dryweight content.

2B.3 Special seeding and mulching equipment.

2B.3.1 Seeder. Equipment to be used for applying a seed-fertilizer mix over prepared slopes shall be a hydraulic seeder designed to pump a water-seed-fertilizer mixture over areas to be seeded at the specified rates. A power-driven agitator keeps the mixture uniform during the seeding cycle.

2B.3.2 Mulch spreader. Equipment to be used for spreading mulch shall be equipment designed to apply an asphalt adhesive to the straw mulch material at the end of a movable boom, then with a high velocity air stream, blow the asphalt-sprayed straw over the graded areas to form a uniform, porous, stable blanket, tied in place by the asphalt adhesive.

2B.3.3 Wood cellulose fiber mulch spreader. Hydraulic equipment used for the application of fertilizer, seed, and slurry or prepared wood pulp shall have a built-in agitation system with an operating capacity sufficient to agitate, suspend, and homogeneously mix a slurry containing up to 40 pounds of fiber plus a combined total of 70 pounds of fertilizer solids for each 100 gallons of water. The slurry distribution lines shall be large enough to prevent stoppage. The discharge line shall be equipped with a set of hydraulic spray nozzles which will provide even distribution of the slurry on the various slopes to be seeded. The slurry tank shall have a minimum capacity of 1,000 gallons and shall be mounted on a traveling unit which may be either self-propelled or drawn with a separate unit which will place the slurry tank and spray nozzles within sufficient proximity to the areas to be seeded so as to provide uniform distribution without waste. Equipment with smaller tank capacity may be used provided that the equipment has the necessary agitation system and sufficient pump capacity to spray the slurry in a uniform coat.

2B.4 Quality Control.

2B.4.1 Inspection and tests.

(a) Seed. Furnish duplicate signed copies of a statement from the vendor, certifying that each container of seed is fully labeled in accordance with the Seed Improvement Association requirements for certification. This certification shall appear on, or with, all copies of

invoices for the seed. Each lot of seed will be subject to sampling and testing at the discretion of the Officer in Charge of Construction (OICC). Sampling and testing will be in accordance with the latest regulation under the Federal Seed Act. Samples shall be submitted at least 40 days in advance of the planned planting date.

(b) Fertilizer and lime. Furnish duplicate copies of invoices for all fertilizer and lime used on the project. Invoices for fertilizer shall show the analysis and the quantity furnished. Invoices for lime shall show the percentage of magnesium oxide and quantity furnished. Upon completion of the project, a final check of the total quantities of fertilizer and lime used will be made against the total area seeded and if the rates of application have not been met, additional quantities of these materials shall be applied to make up the application specified.

2B.4.2 Samples.

(a) Mulch. At least 5 days prior to the initiation of the seeding work, the Contractor shall furnish representative samples of the materials proposed to be used for approval.

(b) Asphalt adhesives. The Contractor shall demonstrate, before starting the work, that the application of asphalt will be made at the specified rates and that method of application is satisfactory. The Contractor shall furnish copies of manufacturer's specifications for asphalt adhesives.

2B.5 Seedbed preparation. Equipment necessary for the proper preparation of the seedbed and for handling and placing of all required materials shall be on hand, in good condition and shall be approved before the work is started.

2B.5.1 Clearing. Prior to or during grading and tillage operations, the ground surface shall be cleared of stumps, stones, roots, cable, wire, grade stakes, and other materials that might hinder proper grading, tillage, seeding, or subsequent maintenance operations.

2B.5.2 Gradings. Grades on the area to be treated shall be maintained in a true and even condition. Maintenance shall include any necessary repairs to previously graded areas.

2B.5.3 Tillage. All graded areas shall be thoroughly tilled to a depth of at least 4 inches by plowing, disking, harrowing, or other approved methods until the condition of the soil is acceptable. On sites where soil conditions are such that high clay content and excessive compaction cause difficulty in getting clods and lumps effectively pulverized, the Contractor shall use the rotary tillage machinery, until the mixing of the soil is acceptable and no clods or clumps remain larger than 1½ inches in diameter. A firm and compact seedbed is required, and after being graded, the seedbed shall be lightly compacted with a land roller, such as a cultipacker, before and after seeding. All tillage operations shall be as near on the contour as is practical but in no instance up and down the slope.

2B.5.4 Topsoiling. The topsoil shall be uniformly distributed on the designated areas and evenly spread to an average thickness of 4 inches, with a minimum thickness of 3 inches. Prior to placing the topsoil, the subgrade, wherever excessively compacted by traffic or other causes, shall be loosened by disking or by scarifying to a depth of at least 2 inches, to permit bonding to the subgrade. The spreading shall be performed in such a manner that planting can proceed with little additional soil preparation or tillage. Any irregularities in the surface resulting from topsoiling or other operations shall be corrected in order to prevent the formation of depressions where water will stand. Topsoil shall not be placed when the subgrade is frozen, excessively wet, extremely dry, or in a condition otherwise detrimental to the planting or to proper grading.

2B.6 Liming. Limestone shall be uniformly applied at the rate of 3,000 pounds per acre (70 pounds per 1,000 square feet) to all areas to be vegetated. Limestone may be applied to the area prior to the preparation of the seedbed, but in all cases, it shall be applied before seeding and thoroughly incorporated into the entire depth of the prepared seedbed. The incorporation of the lime may form a part of the tillage operation specified above.

2B.7 Fertilizing. The fertilizer shall be uniformly applied at the rate of 1,000 pounds per acre (23 pounds per 1,000 square feet) to all areas to be vegetated. The fertilizer shall be incorporated into the upper three or four inches of prepared seedbed. This can be done just prior to the last tillage operation or just prior to seeding, but in no case, will it be applied more than 3 days before seeding or before the lime is applied. Distribution by means of an approved seed drill equipped to sow seed and distribute fertilizer at the same time will be acceptable. When hydroseeding equipment is used for planting operation, fertilizer shall be applied simultaneously with seed using the above rate of application.

2B.8 Seeding. The Contractor shall make use of special hydroseeding equipment or approved mechanical power-drawn seeders. When conditions are such, by reason of draught, high winds, excessive moisture, or other factors that satisfactory results are not likely to be obtained, the work shall be stopped, and resumed only when conditions, are favorable. If inspection during seeding operation, or after there is a show of green, indicates that strips wider than the space between the rows planted have been left, or other areas skipped, additional seed shall be sown on these areas. Seed shall be sown between 15 March and 1 May or between 1 September and 15 October. Spring seeding shall be at the rate of 100 pounds per acre of the following seed mixture.

Variety	Pounds
Ky-31 Fescue	80
Common Bermuda (hulled)	20

Fall seeding shall be at the rate of 120 pounds per acre of the following seed mixture:

Variety	Pounds
Ky-31 Fescue	100
Common Bermuda (unhulled)	20

Note: The variety of seeds indicated shall be sown only during the optimum periods specified.

2B.8.1 Broadcast seeding. In areas too confined for the operation of machinery, hand-operated equipment, such as the "Cyclone" seeder, shall be employed. The seed shall be uniformly distributed over the designated area. Half the seed shall be sown with the sower moving in one direction, and the remainder shall be sown with the sower moving at right angles to the first sowing. In confined areas, the seed shall be covered, but no deeper than 1/4 inch, by means of rakes or other approved hand tools. Broadcast seeding shall not be done during windy weather.

2B.8.2 Slurry seeding. Seed shall be sown with an approved hydroseeder in combination with fertilizer, or in combination with wood cellulose fiber mulch and fertilizer. Seed shall be uniformly distributed over the areas to be seeded.

2B.8.3 Mechanical power-drawn seeder. Seeding shall be accomplished with a combination grass planter and land packer or pulverizer. The seed shall be planted no deeper than 1/4 inch. The seeding operation should be as near on the contour as is practical, but never up and down the slope. After seeding, the seeded areas shall be compacted with a land roller, such as a cultipacker. (It will be permissible to sow the seed and cultipack the soil all in one operation if the proper equipment is used.)

2B.9 Mulching. The surface of all seeded areas shall be protected by the application of any of the before-mentioned mulch material unless otherwise specified.

2B.9.1 Straw or hay shall be applied evenly over the seeded area in such a manner that thickness of the mulch is approximately uniform throughout the treated area and sunlight is not completely excluded from penetration to the ground surface. The straw mulch shall be applied at the rate of one and one-half tons per acre.

2B.9.2 Wood cellulose fiber mulch. The application of the wood cellulose fiber mulch shall be with the hydroseeder and shall be accomplished immediately after completion of the final tillage operation. The wood cellulose fiber mulch shall be applied at the rate of 1,000 pounds per acre in combination with water, fertilizer and seed and shall be sprayed over the soil in a uniform coat.

2B.10 Anchoring mulch. Straw or hay mulch shall be anchored in place as follows:

(a) By use of a cut-away rolling flat-disk packer or

(b) By uniformly spraying the straw with the specified asphalt material at the rate of 0.10 gallon per square yard.

2B.11 Protection. The area shall be protected against foot and vehicular traffic by erecting adequate barricades immediately after seeding is completed, and by placing warning signs of an approved type.

2B.12 Establishment. The Contractor shall be responsible for the proper care of the seeded area during the period when the vegetation is being established. In the event of an erosive rain before an adequate stand of vegetation is established, damaged areas shall be repaired, limed, fertilized, seeded, and mulched wholly at the Contractor's expense. This period shall extend for 30 days after the completion of the mulching.

2B.13 Postponement of seeding. If upon completion of the finish grading, the seeding cannot be completed during the specified periods, then the seeding shall be accomplished during the next seeding period specified. Only an amount considered sufficient by the OICC to cover payment for this work will be withheld from the progress payments. The beneficial occupany of the facility shall not be delayed by the postponement of the seeding.

END OF SECTION 2B

SECTION 2C DEMOLITION

2C.1 Applicable publications. The following publications of the issues listed below, but referred to elsewhere by basic designation only, form a part of this specification to the extent indicated by the references thereto (where a number is suffixed to the specifications, it denotes the effective amendment to the specification).

(a) Non Government specifications and Standards.

American Waterworks Association (AWWA)

A100-66 Deep Wells

2C.2 General requirements. This section covers general demolition, removal, and disposition of structures, pipe lines, power lines and other existing facilities where indicated.

2C.3 Scheduling. No demolition shall begin until construction and demolition schedules are submitted in writing and approved. Generally, new construction is required prior to removal of the unit to be demolished.

2C.4 Protection of existing service lines and utilities structures. Existing utility lines that are shown on the drawings or the locations of which are made known to the Contractor as well as utility lines and structures constructed under this contract, shall be protected from damage during demolition, excavation, and backfilling, and if damaged, shall be repaired by the Contractor at his expense. When utility lines that are to be removed or relocated are encountered within the area of operations the Contractor shall notify the Officer in Charge of Construction (OICC) in ample time for necessary measures, to be taken to prevent damage or interruption of service. In the event that the Contractor damages any existing utility lines that are not shown, or the locations of which are not known to the Contractor, report thereof shall be made immediately to the OICC. If determined that repairs are to be made by the Contractor such repairs shall be made under the provisions of the contract respecting an adjustment for changed conditions.

2C.5 Demolition. Generally, any method of demolition except blasting with explosives shall be allowed provided the operation and function of adjacent facilities are not impaired as well as existing structural and foundation characteristics. Before demolishing any building, its contents shall be completely removed. Reinforcing steel in concrete shall be cut as required to diminish pieces to a size which can be hauled on a normal size dump truck, except as otherwise specified, all demolished material shall become the property of the Contractor and shall be removed from the limits of the station. Existing buildings shall be removed completely,

including roofs, walls, and floor slabs. Underground piping, wiring and other items 5 feet outside building walls and more than 1 foot 6 inches deep may be abandoned in place.

2C.6 Equipment contained in the structures to be demolished shall be removed. All electrical and mechanical services to such structures and all electrical and mechanical services to be abandoned shall be removed back to services that are to remain and shall be properly blanked or plugged off as approved.

2C.7 Earthwork. All excavation, backfill,etc., required for demolition work shall comply with section "Earthwork".

2C.8 Equipment to be salvaged. Equipment to be salvaged for reuse shall be removed prior to beginning demolition. Removal shall be accomplished so as to protect and avoid damage to equipment.

2C.8.1 Equipment to be delivered to the Government. The existing vertical turbine pump in well number 2-3 (Building M-244) shall be removed from the well and delivered to the Building 1103.

2C.8.2 Equipment to be salvaged for reuse is as follows:

42 gallon surge tank in Building M-244
42 gallon surge tank in Building M-627
Honeywell pressure switch on surge tank in Building M-242.

2C.9 Abandoning existing walls. Existing wells to be abandoned shall be sealed with cement grout in accordance with AWWA A-100. The existing well top shall be removed and cut off one foot below grade and covered over.

END OF SECTION 2C

DIVISION 3 CONCRETE

SECTION 3A CAST-IN-PLACE CONCRETE

3A.1 Applicable publications. The following publications of the issues listed below, but referred to elsewhere by basic designation only, form a part of this specification to the extent indicated by the references thereto (where a number is suffixed to the specification number, it denotes the effective amendment to the specification):

3A.1.1 Federal and Military Specifications and Standards:

O-C-105C Calcium Chloride, Dihydrate and Calcium Chloride, Anhydrous; Technical.
SS-C-192G(3) Cement, Portland
SS-S-1401A(2) Sealing compound, Hot applied, for Concrete and Asphalt Pavements.
UU-B-790A Building Paper, Vegetable Fiber; (Kraft, Waterproofed, Water Repellent and Fire Resistant).
CCC-C-467C Cloth, Burlap, Jute (or Kenaf).

3A.1.2 Non-Government Specifications and Standards:

American Concrete Institute (ACI):

ACI 305-72 Recommended Practice for Hot Weather Concreting.
ACI 306-66 Recommended Practice for Cold Weather Concreting.
ACI 318-71 Building Code Requirments for Reinforced Concrete.
ACI 347-68 Recommended Practice for Concrete Formwork.

American Society for Testing and Materials (ASTM)

A 185-70 Welded Steel Wire Fabric for Concrete Reinforcement
A 615-68 Deformed Billet-Steel Bars for Concrete Reinforcement
C 31-69 Making and Curing Concrete Compressive and Flexural Strength Test Specimens in the Field.
C 33-71a Concrete aggregates
C 39-71 Compressive Strength of Cylindrical Concrete Specimens
C 94-73a Ready-mixed concrete
C 138-73 Unit Weight, Yield, and Air Content (Gravimetric) of concrete
C 143-71 Slump of Portland Cement Concrete
C 172-71 Sampling Fresh Concrete.
C 231-72T Air Content for Freshly Mixed Concrete by the Pressure Method
C 260-69 Air-Entraining Admixtures for Concrete; Specifications.
C 309-72 Liquid Membrane-Forming Compounds for Curing Concrete
D 1751-71a Preformed Expansion Joint Fillers for Concrete Paving and Structural Construction (non-Extruding and Resilient Bituminous Types).

3A.2 Quality Control. All testing will be conducted by the OICC, as specified hereinafter; samples shall be furnished by the Contractor as specified hereinafter, and at his expense. Approvals, except those required for field installations, field applications, and field tests shall be obtained before custom fabrication is started and before delivery of materials or equipment to the project site. All materials and materials sources shall be approved not less than 30 days prior to their use in the work. Approval of samples, catalog data and shop drawings shall be by the OICC.

3A.2.1 Certified Laboratory Test Reports. The testing requirements for materials incorporated in referenced documents will be waived provided the manufacturer submits notarized certificates stating that previously manufactured materials meet testing requirements specified, and that the materials furnished for this project are of the same type, quality, manufacture, and make as that tested. Copies of the test reports need not be submitted except as specifically requested by the OICC.

3A.3 Proportioning Concrete. The design of the concrete mixture using materials specified herein shall be the responsibility of the Contractor as set forth under Alternate No. 2 of the ASTM C94. The concrete produced shall have the following characteristics:

3A.3.1 Compressive strength at 28 days shall not be less than 3,000 pounds per square inch.

3A.3.2 Control. The strength quality of the concrete proposed for use shall be established by tests made in advance of operations.

3A.3.3 Slump shall be not more than 3 inches for vibrated concrete and 4 inches for non-vibrated concrete.

3A.4 Materials.

3A.4.1 Cement. Cement shall be Type I or II conforming to SS-C-192.

3A.4.2 Water. Water for mixing and curing, including free moisture and water in the aggregates, shall be fresh, clean and potable.

3A.4.3 Aggregates. Aggregates shall conform to ASTM C33, except as modified herein.

3A.4.3.1 Fine aggregate. Gradation of fine aggregate shall be as shown in ASTM C33.

3A.4.3.2 Coarse aggregate. Grading of coarse aggregate shall be in accordance with ASTM C33, Size No. 57.

3A.4.4 Admixtures. Admixtures shall be used in the concrete as specified hereinafter. Chemical admixtures shall not be used without the written permission of the OICC. When more than one admixtures is used in a mix, the Contractor shall furnish satisfactory evidence that the admixtures to be used are compatible in combination with the cement and aggregates to be used for the project and will be suitable at the job temperatures. The cost of the admixtures to be used for this project shall be included in the contract bid price.

(a) Air-entraining admixtures conforming to ASTM C 260 shall be used in all concrete specified to be air-entrained. Certification that the air-entraining agent has been tested shall be furnished by the Contractor.

3A.4.5 Reinforcement.

3A.4.5.1 Reinforcing bars. All reinforcing steel shall be deformed. Reinforcement not specified or indicated otherwise shall have a minimum yield strength of 40,000 pounds per square inch, and shall conform to Grade 40 of ASTM A615.

3A.4.5.2 Welded wire fabric shall be electrically welded fabric of cold-drawn wire of gate and mesh size shown on the drawings or specified herein, and shall conform to ASTM A 185. Where the size, mesh and weight of the fabric are not indicated or specified otherwise, fabric shall be 6 inch by 6 inch mesh, No. 6 gage of 0.192-inch nominal diameter wire weighing approximately 42 lbs. per 100 square feet.

3A.4.6 Materials for Curing Concrete.

3A.4.6.1 Waterproof paper shall conform to UU-B-790.

3A.4.6.2 Polyethylene sheeting shall be natural color and shall be a nominal thickness of 0.004 inch.

3A.4.6.3 Polyethylene-coated burlap shall be 4 mil white opaque polyethylene film impregnated or extruded into one side of the burlap. Burlap shall weight not less than 9 ounces per square yard and shall conform to CCC-C-467.

3A.4.6.4 Liquid membrane-forming compound shall conform to ASTM C 309, white pigmented Type 2, and be free of paraffin or petroleum.

3A.4.7 Joint-Sealing Materials. Joint-sealing materials shall conform to SS-S-1401.

3A.4.8 Expansion Joint Filler. Expansion joint filler shall be preformed type conforming to ASTM D 1751.

3A.4.9 Vapor Barrier shall be polyethylene sheeting not less than 6 mil nominal thickness.

3A.5 Forms.

3A.5.1 General requirements. Forms shall be provided for all concrete not indicated or specified otherwise. Forms shall be set true to line and grade and maintained so as to insure complete work within the allowable tolerances specified, and shall be mortar-tight. The Contractor shall be responsible for the adequacy of forms and form supports. Bolts and rods used for internal ties shall be arranged so that when the forms are removed, all metal will be not less than 1½ inches from any surface. All forms shall be constructed so that they can be removed without damaging the concrete. All exposed joints, edges, and external corners shall be chamfered a minimum of 3/4 inch unless specified otherwise hereinafter.

3A.5.2 Materials for forms. Forms shall be of wood, plywood, steel or other suitable material. Wood forms, for surfaces exposed to view in the finished structure and requiring a standard finish, shall be tongue-and-groove boards of plywood. For unexposed surfaces, undressed square-edge lumber may be used. Surfaces of steel forms shall be free from irregularities, dents, and sags.

3A.5.3 Coating. Before placing the concrete, the contact surfaces of forms shall be coated with a non-staining material oil or suitable non-staining form coating compound, or shall be given two coats of nitro-cellulose lacquer. All excess coating shall be removed by wiping with cloths. Re-used forms shall have the contact surfaces cleaned thoroughly; those which have been coated shall be given an additional application of the coating.

3A.5.4 Tolerances and Variations. The Contractor shall set and maintain concrete forms to ensure that, after removal of the forms and prior to patching and finishing, no portion of the concrete work will exceed any of the tolerances specified in ACI 347.

3A.6 Vapor Barrier. Vapor barrier shall be provided beneath the entire concrete floor slab of the buildings. The material shall be placed in the greatest widths and lengths practicable so as to eliminate joints wherever possible; where joints are necessary, the material shall be lapped not less than 6 inches for the side and end laps and sealed with approved adhesive. Torn, punctured, or damaged vapor barrier material shall be removed and replaced as directed, prior to the placing of concrete. Concrete shall be placed in a manner to preclude damage to the vapor barrier material.

3A.7 Measurement and mixing.

3A.7.1 General. Materials shall be measured, batched, and mixed in stationary or truck mixers as specified in ASTM C94. Concrete may be ready-mixed except as modified herein, or may be mixed on the site at the option of the Contractor. Proportioning of materials shall be accomplished by weighing.

3A.7.2 Job Mixed Concrete. Concrete mixed at the job site shall be mixed in an approved type batch mixer in the manner specified for stationary mixers in ASTM C94.

3A.7.3 Ready-mixed concrete. Except for the materials and placing times herein specified, ready-mixed concrete shall be mixed and delivered to the project in accordance with ASTM C94, using Alternate No. 2 for the mix design. With each load of concrete delivered to the project the ready-mixed concrete producer shall furnish, in duplicate, certification as required by ASTM C94.

3A.8 Placing Reinforcement and Miscellaneous Materials.

3A.8.1 General Requirements. All reinforcement shall be provided with all necessary wire ties, chairs, spacers, supports, and other devices necessary to install and secure the reinforcement properly. All reinforcement, when placed shall be free from flaky rust, scale, oil, grease, clay, and other coatings, and foreign substances that would reduce or destroy the bond. All reinforcement shall be supported and wired together to prevent displacement by construction loads or by the placing of concrete. Unless directed otherwise by the OICC, reinforcement shall not be bent after being partially embedded in hardened concrete. Where cover over reinforcing steel is not specified it shall be in accordance with ACI 318.

3A.8.2 Placing reinforcement. Reinforcement shall be placed accurately and secured. It shall be supported by suitable chairs or spacers or by metal hangers. On the ground and where otherwise subject to corrosion, concrete or other suitable non-corrodible material shall be used for supporting reinforcement. Welded wire fabric used as structural reinforcement in slabs shall be supported and adequately secured as required for reinforcing steel. Welded wire fabric shall be extended through construction joints and construction joints.

3A.8.3 Splicing of Reinforcement. Splicing of reinforcement shall be in accordance with ACI 318, except as indicated otherwise or modified herein. Where splices in addition to those indicated on the drawings are necessary, they shall be approved by the OICC prior to their use. Sides and ends of welded wire fabric shall be overlapped not less than one mesh.

3A.8.4 Setting Miscellaneous Materials. Anchors and bolts, including but not limited to those for machine and equipment bases; frames or edgings, hangers and inserts, pipe supports, pipe sleeves, metal ties, conduits, drains, and all other materials in connection with concrete construction; shall, where practicable, be placed and secured in position when the concrete is placed. Anchor bolts for machines shall be set to templates, shall be plumbed carefully and checked for location and elevation with an instrument, and shall be held in position rigidly to prevent displacement while concrete is being placed.

3A.9 Conveying and placing concrete.

3A.9.1 Conveying. Concrete shall be deposited as nearly as possible in its final position in the forms. At any point in the conveying, the free vertical drop of the concrete shall not exceed 3 feet. Chuting will be permitted only where the concrete is deposited into a hopper before it is placed in the forms. Conveying equipment shall be cleaned thoroughly before each run. All concrete shall be deposited as soon as practicable after the forms and the reinforcement have been inspected and approved. Concrete which has segregated in conveying shall be removed and disposed of as directed by the OICC.

3A.9.2 Placing concrete. No concrete shall be placed after there is evidence of initial set. All concrete placing equipment and materials shall be subject to approval. Concrete placement will not be permitted when weather conditions prevent proper placement and consolidation. The placement of concrete in uncovered areas during periods of precipitation will not be allowed. Placing concrete is water will not be allowed. Subgrades of earth or other material shall be properly prepared and, if necessary, covered with heavy building paper or other suitable material to prevent the concrete from becoming contaminated. Before placing concrete on porous subgrades, they shall be dampened as required to prevent water of hydration from being absorbed into the subgrade. Forms shall be clean of dirt, construction debris, water, snow and ice. The method of depositing concrete shall be such as to avoid displacing the reinforcement and segregating the aggregate. Concrete shall be worked about the reinforcement and embedded fixtures and into corners and angles of the forms, care being taken to avoid overworking which may result in segregation. Water which accumulates on the surface of the concrete during placing shall be removed by absorption with porous materials in a manner that prevents removal of cement. Pumping of concrete through aluminum pipe shall not be permitted.

3A.9.3 Vibration. All concrete, with the exception of concrete slabs 4 inches or less in depth, shall be compacted with high frequency, internal, mechanical vibrating equipment supplemented by hand spading and tamping. Concrete slabs 4 inches or less in depth shall be consolidated by wood tampers, spading and settling with a heavy leveling straight edge.

3A.9.4 Expansion joints and Embedded Items.

3A.9.4.1 Expansion joints shall not be less than 1/2 inch wide except as indicated otherwise. Expansion joints not exposed to weather shall be filled completely with preformed joint material. Expansion joints exposed to weather shall be filled to a depth of 1 inch from the surface or face of the concrete with preformed joint material. The 1 inch deep space above the preformed material shall be cleaned after the concrete has been cured, and when dry, filled flush with joint sealing material.

3A.9.4.2 Embedded Items. All sleeves, inserts, anchors, and embedded items required for adjoining work or for its support shall be placed prior to concreting. All sub-contractors, whose work is related to the concrete or must be supported by it, shall be given ample notice and

opportunity to introduce or furnish embedded items before the concrete is placed. All ferrous metal sleeves, inserts, anchors, and other embedded ferrous items exposed to the weather or where rust would impair the appearance or finish of the structure shall be galvanized. Embedded items shall be positioned accurately and supported against displacement. Voids in sleeves, inserts, and anchor slots shall be filled temporarily with readily removable material to prevent the entry of concrete into the voids. Aluminum shall not be embedded in concrete except where aluminum is protected from direct contact with the concrete.

3A.9.5 Placing concrete in Cold Weather. Placing concrete in cold weather shall be in accordance with ACI 306 except as modified herein. Except when authorized specifically by the OICC, concrete shall not be placed when the atmospheric temperature is below 40 degrees Fahrenheit. When the concrete is likely to be subjected to freezing temperatures within 24 hours, concrete materials shall be heated, at no additional cost to the Government, so that the temperature of the concrete when deposited shall be between 65 and 80 degrees Fahrenheit. Methods of heating materials shall be submect to approval of the OICC. Water for mixing shall not be heated above 165 degrees Fahrenheit. Lumps of frozen material and ice shall be removed from the aggregates before placing them in the mixer. When approved by the OICC, not more than 2 pounds of type I or 1 pound 10 ounces of type II calcium chloride conforming to O-C-105 may be used per bag of cement as an accelerator. No extra payment will be made for the calcium chloride so used. It shall be applied in the mixer drum in the form of a solution; the water in the solution shall be included in the water-cement ratio of the concrete mixture. All other requirements given hereinbefore shall apply when calcium chloride is used. Concrete damaged by freezing shall be removed and replaced at no additional cost to the Government.

3A.9.6 Placing Concrete in Hot Weather. Placing concrete in hot weather shall be in accordance with ACI 305 except as modified herein. In hot weather, extra care shall be taken to reduce the temperature of the concrete being placed, and to prevent rapid drying of newly placed concrete. When the outdoor ambient temperature is more than 90 degrees Fahrenheit, the temperature of the concrete as placed shall not exceed 90 degrees Fahrenheit; the fresh concrete shall be shaded as soon as possible after placing; and curing shall be started as soon as the surface of the fresh concrete is sufficiently hard to permit it without damage.

3A.10 Surface Finishes.

3A.10.1 General Requirements. All formed surfaces shall be repaired by patching minor honeycombed or otherwise defective areas and tie holes with cement mortar. Cement mortar for patching shall be proportioned one part cement to two parts fine sand. Patching shall be done as soon as the forms are removed; areas of surfaces which are to be cured with a

curing compound shall be covered during the application of the compound. All areas to be patched shall be cleaned thoroughly. The area to be patched and at least 6 inches adjacent thereto shall be saturated with water before placing the mortar. Patches on exposed surfaces shall be finished to match the adjoining surfaces. Patches shall be cured as specified for the concrete.

3A.10.2 Standard Finish. Standard finish shall be provided for all exposed concrete not indicated or specified otherwise. The surface of the concrete shall not vary more than 1/4 inch when measured from a five-foot template. Exposed surfaces shall be uniform in appearance.

3A.10.3 Against Forms. All fins and other projections shall be removed carefully, and all abrupt irregularities shall be leveled. Surface pits having a dimension greater than 1/8 inch shall be filled with cement mortar as specified hereinbefore for patching.

3A.10.3.1 Not Against Forms. Surfaces not specified otherwise shall be finished with wood floats to even surfaces.

3A.10.4 Floor Finishes. The finishes included herein include surface finishes, treatments and toppings, for floors and slabs. All floor slabs where finish is not indicated or specified shall receive a single steel troweling. Dry cement shall not be placed directly upon the new concrete surface to absorb excess moisture.

3A.10.4.1 Concrete of slump within the limits specified hereinbefore shall be placed, consolidated and immediately struck off to bring the top surface of the slab to proper contour, grade and elevation. This operation may be followed immediately by a darbying or bull floating of the surface with wooden tools so as to correct any unevenness. Striking-off and darbying shall be completed before bleed water appears on the surface of the freshly placed concrete. No further work shall then be performed until the concrete has attained a set sufficient for floating and sufficient to support the weight of the finisher and equipment. If the bleed water has not disappeared by the time floating of the surface is to start, the excess water shall be first dragged off the surface using a rubber hose. At no time shall dry cement be used to absorb bleed water. At the proper time, floating shall be performed by hand with a wood or magnesium float, or with a power-driven float of suitable type. Upon attaining proper set, the surface shall be flat-steel-troweled. Burnished trowelling shall be obtained by using raised steel trowelling until practically not change in the sheen of the surface is effected by added trowelling.

3A.11 Curing and Protection.

3A.11.1 General requirements. Concrete shall be protected adequately from injurious action by sun, rain, flowing water, frost, and mechanical injury, and shall not be allowed to dry out from the time it is placed

until the expiration of the minimum curing periods specified hereinafter. Curing shall be accomplished by moist curing, impervious-sheeting curing, or by application of liquid membrane-forming compound. Membrane-forming compound shall not be used on concrete to which other concrete is to be bonded. Completion of curing shall be initiated immediately following the removal of forms. The temperature of the air next to the concrete shall be maintained at not less than 40 degrees Fahrenheit for the full curing periods. When concrete is authorized for placement in temperatures below 40 degrees Fahrenheit, the air in contact with the concrete shall be maintained at a temperature of not less than 50 degrees Fahrenheit for a period of 7 days after placing, or at not less than 70 degrees Fahrenheit for a period of 3 days after placing, and at not less than 40 degrees Fahrenheit for the remainder of the specified curing periods. Heating of the concrete in place shall be effected by vented heaters or steam coils under canvas covers or by other suitable means. The temperature within enclosures shall not exceed 100 degrees Fahrenheit, and adequate moisture shall be applied to the concrete surface during the heating period to prevent it from drying out. The rate of cooling after the protection period shall be approximately one degree Fahrenheit per hour for the first 24 hours and 2 degrees Fahrenheit per hour thereafter. Concrete shall be protected against freezing for the full curing period specified hereinafter.

3A.11.2 Moist Curing.

3A.11.2.1 Mats: The entire surface of the concrete shall be covered with two thicknesses of wet burlap weighing not less than 7 ounces per square yard, dry weight, or other suitable material having high absorptive quality. The material shall be thoroughly wet when applied and shall be kept continuously wet during the time it remains on the slab. Mats shall be left in place not less than 72 hours.

3A.11.2.2 Impevious Sheeting Curing. The entire exposed surface shall be wetted thoroughly with a fine spray of water and then covered with (a) waterproofed paper, (b) polyethylene-bonded waterproof paper sheeting, (c) polyethylene-coated burlap sheeting, or (d) polyethylene sheeting. Sheets shall be laid directly on the concrete surface and overlapped 12 inches when a continuous sheet is not used. The curing medium shall be not less than 18 inches wider than the concrete surface to be cured, and shall be weighted down by placing a bank of moist earth on the edges just outside the forms and over the transverse laps to form closed joints. Sheets shall be satisfactorily repaired or replaced if torn or otherwise damaged during curing. The curing medium shall remain on the concrete surface to be cured for not less than 7 days.

3A.11.3 Liquid Membrane-Forming Compound Curing. Liquid membrane forming compound curing shall be accomplished by applying a white-pigmented liquid compound, free of paraffin or petroleum, over the concrete surface, to restrict evaporation of the mixing water. All joint openings except

sawed joints shall be sealed at the top by inserting moistened paper or fiber rope, or covering with strips of waterproof material, prior to application of the curing compound, in a manner to prevent the curing compound from entering the joint. Seven days following the placing of the liquid membrane-forming compound shall be considered as the end of the curing period and the basis for determining when joint sealing material will be placed in the joints. The curing compound shall be spray applied in two coats and in strict accordance with the manufacturer's printed instructions.

3A.11.3.1 Protection of Treated Surfaces. Concrete surfaces to which liquid membrane-forming compounds have been applied shall be kept free from all foot and vehicular traffic and all other sources of abrasion for not less than 72 hours. Continuity of the coating shall be maintained for the entire curing period and any damage to the coating during this period shall be repaired immediately.

3A.11.4 Curing Periods. When a 7-day compression-test cylinders, representative of parts of a structure already placed, indicate that the 28-day strengths may be less than 90 percent of the design strengths, those parts of the structure shall be given additional curing, as directed by the OICC. Curing shall be as follows:

Time (Minimum)	Concrete Element
7 days	All concrete not specified otherwise.

3A.11.5 Removal of forms and Protection. Forms shall be removed in a manner which will prevent damage to the concrete. Forms shall not be removed until at least 24 hours after completion of concrete placing. If curing temperatures are below 50 degrees Fahrenheit, the minimum time for removal of forms and shores shall be 50 percent greater than specified. Concrete work shall be protected from damage during the construction.

3A.12 Miscellaneous Construction.

3A.12.1 Splash blocks. Splash blocks shall be provided at outlets of pump blowoffs; they shall be precast concrete, 24 inches long, 12 inches wide, and 6 inches thick, with countersunk dishes finished smooth and sloped to drain away from the building. The earth shall be compacted to provide firm bases for the blocks.

3A.13 Sampling and Testing.

3A.13.1 Sampling.

13A.13.1.1 Concrete. Samples of wet concrete shall be collected during each working day as often as required to perform all tests required herein. Test specimens shall be made in accordance with ASTM C31. Sampling fresh concrete shall be in accordance with ASTM C172. Concrete samples shall be of proper size to permit making the required tests specimens.

3A.13.2 Testing.

3A.13.2.1 Cement testing. Tests on cement will be waived and mill certificates will be acceptable.

3A.13.2.2 Concrete testing.

3A.13.2.2.1 Testing consistency of concrete slump shall be determined in accordance with ASTM C 143. Tests shall be made at the beginning of a concrete placement operation and at subsequent intervals to insure that the specification requirements are met. In addition, tests shall be made each time test cylinders are made.

3A.13.2.2.2 Compressive tests. Unless otherwise specified, testing of specimens for compressive strength shall be in accordance with ASTM C 39. Three test specimens shall be made for each set of tests. Tests will be made at 7 and 28 days from time of molding. One specimen shall be tested at 7 days, and the other two at 28 days. When a satisfactory relationship between 7 day and 28 day strengths has been established, the 7 day test results may be used as an indicator of the 28 day strength. Each strength test for 28 day strength shall be the average of the strengths of the two test specimens of a set. The strength level of the concrete will be considered satisfactory if the averages of all sets of three consecutive strength test results equal or exceed the specified 28 day compressive strength, and no individual strength test falls below the required 28 day compressive strength by more than 500 pounds per square inch. Where strength level of concrete falls below the specified limits, the Government may order core samples taken, and tested, at the Contractor's expense. In such event, three core samples for each cylinder test indicating defective concrete shall be taken for further testing. Sampling, testing, and evaluation of drilled cores shall be in accordance with ACI 318, Part 3, Chapter 4. Concrete which is determined to be defective based on the strength acceptance criteria therein shall be removed and replaced with acceptable concrete, at no additional cost to the Government. Frequency of compressive tests on concrete cylinders shall be as follows:

a. Not less than 6 test cylinders for each 150 cubic yards, or fraction thereof, of each class of concrete placed, and

b. Not less than 3 test cylinders for each day for each class of concrete placed that day

c. Space testing so that no more than 3 of the test cylinders are taken from any one batch.

3A.13.2.2.3 Air Content. Air entrained concrete shall be tested for air content at the same frequency as specified for slump tests.

END OF SECTION 3A

DIVISION 4 FINISHES

SECTION 4A Field Painting

4A.1 Applicable publications. The following publications of the issues listed below, but referred to elsewhere by basic designation only, for a part of this specification to the extent indicated by the references thereto (where a number is suffixed to the specification number, it denotes the effective amendment to the specifications).

4A.1.1 Federal and Military Specifications.

TT-E-489F Enamel, alkyd, gloss (for exterior and interior surfaces).
TT-P-28e Paint, aluminum, heat resisting (1200 Degrees Fahrenheit).
TT-P-98B Paint, stencil, flat.
TT-P-645 Primer, paint, zinc-chromate, alkyd type
MIL-P-15328C(1) Primer, pretreatment (Formula No. 77 for metals).

4A.1.2 Military Standard.

MIL-STD-101B(1) Color code for pipelines and for compressed-gas cylinders.

4A.1.3 Federal Standard.

Fed. Std. 595a Colors

4A.2 Quality Control.

4A.2.1 Test reports for each material when Quantity Required is less than 50 gallons: The manufacturer shall submit notarized certificates that previously manufactured materials have been tested by recognized laboratories, that such materials meet testing requirements in referenced specifications and that the tested material is of the same type, quality, manufacture, and made as that proposed for this project. Copies of the test reports need not be submitted except as specifically requested by the OICC.

4A.2.3 Sample Certificate. The notarized certificate shall not contain statements that could be interpreted to imply that the proposed material does not meet all requirements of the specified material, i.e.; "as good as"; "achieve the same end use and results as materials formulated in compliance with the specified material"; "exceed or equal service and performance of specified material". The certificate should be simple and should state only that the proposed material meet the requirements of the specified material.

SAMPLE CERTIFICATE

The manufacturer hereby certifies that previously manufactured materials have been tested by recognized laboratories, that the tested material is of the same type quality, manufacture and formulation as that furnished for this project, and that the tested material meets all the requirements of the following specifications:

Specified Material	Tested Material
TT-E-489F	John Doe Exterior Enamel No. 5
TT-P-29g	John Doe Interior Latex No. 6

Signature and Title

Notary Seal

4A.3 General requirements. Hardware, hardware accessories, machined surfaces, plates, lighting fixtures, and similar items in contact with painted surfaces and not to be painted shall be removed, masked or otherwise protected prior to surface preparation and painting operations. Following completion of painting, removed items shall be reinstalled. Such removal and reinstalling shall be done by workmen skilled in the trades involved. Surfaces to be painted shall be thoroughly cleaned and, unless specified otherwise, shall be dry when paint is applied. Paint shall not be applied to surfaces upon which there is frost, ice, or snow. Interior areas shall be broom-cleaned and dust free before and during the application of any painting material. Wood and metal surfaces which will be inaccessible after erection shall be treated and primed prior to erection using two coats of the designated primer. Painting material shall be worked thoroughly into all joints, crevices, and open spaces. Succeeding coats of paint shall vary sufficiently in shade from the color of the preceding coat to permit ready identification. Finished surfaces shall be smooth, even, and free of defects. Damaged painting shall be retouched before applying succeeding coats of paint. Paints and paint materials shall be delivered in unbroken original packages bearing the manufacturer's name and brand designation. Storage of paints and paint materials and the mixing of paints shall be restricted to the locations directed. Surfaces to be imbedded in concrete and factory-finished materials shall not be field-painted under this section except that factory-finished surfaces which are damaged during installation shall be restured to their original condition. Reduction of paints to proper brushing consistency shall be accomplished by adding fresh paint; except that when thinning is mandatory for the type of paint being used, written permission to use thinners shall be obtained from the Officer in Charge of Construction (OICC). The written permission shall include quantities and types of thinners to use. Thinners shall not be permitted upon the job site unless written permission for thinning has been given by the OICC.

4A.3.1 Selection of Colors. Colors of finish coats shall be as indicated. Where colors are not indicated the colors shall be as selected by the OICC from Fed. Std. No. 595.

4A.4 Preparation of Surfaces. All dirt, rust, scale, splinters, loose particles, disintegrated paint, grease, oil, and other deleterious substances shall be removed from all surfaces which are to be painted or otherwise finished. Surfaces shall be inspected and approved after preparation and

before application of any coatings.

4A.4.1 Defects in Surfaces. Defects such as scratches, nicks, cracks, gouges, spalls, alligatoring and irregularities due to partial peeling of previous paint coatings shall be repaired, smoothed, sanded, spackled or otherwise treated as necessary to render them practically invisible in the finished work. Where impracticable to satisfactorily eliminate the defects by other mans, existing paint shall be removed from the entire surfaces, the surface repaired as necessary, primed and repainted. Where peeling is general over an area, including self contained portions of a surface, all paint in such area shall be removed and the edges of such removal shall be sanded out to provide imperceptible transition.

4A.4.2 Metal surfaces.

4A.4.2.1 New Metal Surfaces to be Painted. Surfaces, including zinc coated surfaces and unprimed steel and iron surfaces, engine exhaust piping, immediately after being cleaned, shall be given one coat of pretreatment coating conforming to MIL-P-15328 applied to a dry film thickness of 0.2 to 0.5 mil. Zinc coated surfaces to be painted shall be solvent cleaned with mineral spirits and wiped dry with clean dry cloths prior to application of pretreatment coating. Primer paint shall be applied over the pretreatment coating as soon as practicable after the coating has dried.

4A.5 Workmanship and application.

4A.5.1 Application of Coatings. The finished surfaces shall be free from runs, drops, ridges, waves, laps, brush marks, and variations in colors. Coatings shall be applied carefully with good, clean brushes, except as specified otherwise. The work shall be so conducted as to avoid contamination of other surfaces and public and private property in the area; any damage thereto shall be made good by the Contractor at his expense. Sufficient time shall be allowed between coats to permit thorough drying, and each coat shall be in proper condition to receive the next coat. Each coat shall be sufficiently heavy to cover completely the preceding coat or surface; there shall be an easily perceptible difference in shades of successive coats of paint. Exterior paint shall not be applied when the temperature of the air or of the surface is below 45 degrees Fahrenheit and not over 95 degrees Fahrenheit unless approved by the OICC. Interior paint may be applied at any time, provided the surfaces to be painted are dry and the temperature can be kept above 45 degrees Fahrenheit during the application of ordinary paints, and between 65 degrees Fahrenheit and 95 degrees Fahrenheit during the application of enamels and varnishes. Paint shall not be applied in foggy or rainy weather or when the surfaces are not in proper condition for painting.

4A.6 Scope. Surfaces concealed by portable objects and by articles mounted on the surfaces and readily detachable by removal of fasteners such as screws and bolts are included in the work but surfaces concealed

and made inaccessible by panelboards, equipment fixed in placed, etc., are not included. Articles obstructing access to those surfaces specified to be included, in the work shall be removed for access and restored to their original position on completion. Copper, stainless steel and aluminum will not require painting except where specifically so stated. Work in concealed spaces is not required to be painted unless specifically so stated herein. Concealed spaces are defined as spaces above suspended ceilings, attic spaces, crawl spaces, furred spaces and chases. The paint coats specified herein are in addition to the coatings specified hereinbefore. The surfaces to be painted hereunder include all new exterior and interior surfaces with the type materials listed.

4A.6.1 Exterior and interior surfaces shall receive the following unless specified otherwise herein:

4A.6.1.1 Exterior and interior metal shall receive two coats of enamel conforming to TT-E-489. Prior to receiving enamel, new metal surfaces shall receive the following primer coats:

(1) Priming of new Metal Surfaces: Shop-primed metal surfaces shall receive one coat of primer conforming to TT-P-645, applied to a minimum dry film thickness of 1.0 mil. Shop primer coat shall be touched up prior to applying primer specified. Metal surfaces, not shop primed, shall be primed with two coats of primer conforming to TT-P-645. Each coat shall be applied to a minimum dry film thickness of 1.0 mil.

4A.6.2 Piping, Fittings, and Mechanical and Electrical Equipment, except engine exhaust piping; Pipe hangers, structural supports, pipe and pipe fittings, conduits and conduit fittings, and miscellaneous steel and iron work shall be painted to match the adjacent surfaces, utilizing the painting systems as specified hereinbefore. New equipment shall be factory finished in accordance with the specifications for the particular end item.

4A.6.2.1 Surfaces in Unpainted Areas or Not Adjacent to Painted Surfaces, except in concealed spaces, shall receive two coats of enamel conforming to TT-E-489. New surfaces shall receive one coat of primer conforming to TT-P-645 prior to receiving other coats.

4A.6.2.2 Ferrous Piping in Concealed Spaces shall receive two coats of primer conforming to TT-P-645.

4A.6.3 Engine Exhaust piping shall receive two coats of heat resisting aluminum paint conforming to TT-P-28 applied to a total minimum dry film thickness of 2 mils.

4A.6.4 Other surfaces for which the type of paint has not been specified hereinbefore shall be painted as specified for surfaces having similar conditions of exposure.

END OF SECTION 4A

DIVISION 5 EQUIPMENT

SECTION 5A Pumping Equipment

5A.1 Applicable publications. The following publications of the issues listed below, but referred to elsewhere by basic designation only, form a part of this specification to the extent indicated by the references thereto (where a number is suffixed to the specification number it denotes the effective amendment to the specifications):

5A.1.1 Federal and Military Specifications.

HH-P46c	Packing; Asbestos, sheet, compressed
SS-C-466	Cloth, threaded, and tape asbestos
MIL-P-52029C	Pumping Assemblies, deep well, gasoline-engine Driven: Helical-rotor and turbine types
MIL-L-18145A	Louver, metal; exhaust opening and gravity closing type.
MIL-C-17596C	Compressors, reciprocating or rotary power driven (E.M.D.), air, base mounted 10 HP to 300 HP

5A.1.2 Non-Government Specifications and Standards

American Society for Testing and Materials (ASTM)

A53-72a	Welded and seamless steel pipe
A120-72a	Black and hot dipped zinc coated (galvanized) welded and seamless steel pipe for ordinary uses
A525-71	Steel sheet, zinc-coated (galvanized) by the hot dip process.

American National Standards Institute (ANSI/USA)

B16.3-1971	Malleable iron screwed fittings
B31.1-73(73)(74)	Power piping

American Waterworks Association (AWWA)

E101-71	Deep well vertical turbine pumps - line shaft and submersible types

National Electrical Manufacturer's Association (NEMA)

1972 Book of Standards

National Fire Protection Association (NFPA)

37-70	Stationary combustion engines and gas turbines
90A-73	Air Conditioning and ventilating systems

Sheet Metal and Air Conditioning Contractors National Association

(SMACNA)
1969 Low velocity duct construction

American Society of Heating, Refrigerating and Air Conditioning Engineers

(ASHRAE)
1972 Equipment, guide and data book

5A.2 Quality Control. All field tests to determine conformance with the specified requirements shall be performed in the presence of the OICC.

5A.2.1 Materials tests and test reports. The testing requirements for materials incorporated in referenced documents will be waived provided the manufacturer submits notarized certificates stating that previously manufactured materials have been tested by recognized laboratories, that such materials meet testing requirements specified, and that the materials furnished for this project are of the same type, quality, manufacture and make as that tested. Copies of the test reports need not be submitted except as specifically requested by the Officer in Charge of Construction (OICC).

5A.2.2 Standards Compliance. Where equipment or materials are specified to conform to requirements of the standards of organization such as ANSI, ASTM, NFPA, etc., the Contractor shall submit proof of such conformance. The label or listing of the specified agency will be acceptable evidence. In lieu of such certification, label, or listing, a written certificate from an approved nationally recognized testing agency adequately equipped and competent to perform such services may be submitted stating that the items have been tested and that the units conform to requirements specified herein, including methods of testing of the specified agencies.

5A.2.3 Standard products. Materials and equipment shall be standard cataloged products of manufacturers regularly engaged in production of such materials or equipment and shall be manufacturers' latest standard design that complies with the specification requirements. Where two or more units of the same class of equipment are required, these units shall be products of a single manufacturer; however, the component parts of the system need not be the products of the same manufacturer. Each major component of equipment shall have manufacturer's name, address, and model and serial number on a nameplate securely affixed in a conspicuous place; nameplate of a distributing agent only will not be acceptable.

5A.2.4 Verification of dimensions. The Contractor shall be responsible for the coordination and proper relation of his work to the building structure and to the work of all trades. The Contractor shall visit the premises and thoroughly familiarize himself with all dimensions in the field, and to advise the OICC of any discrepancy before performing any work.

5A.2.5 Standard painting of equipment. Manufacturer's standard painting is acceptable only if a minimum of one coat of primer and two coats of enamel are provided on all equipment. The Contractor shall be responsible for providing equipment with at least the minimum painting system specified herein. Additional painting may be shop of field applied.

5A.2.6 Shop drawings and catalog data showing materials, finish, and all pertinent details shall be submitted and approved before delivery of such items to the job site. Contractor shall submit such drawings and data as may be required, including the following:

Gasoline Engines
Pumps
Combination right angle drive
Air compressors
Louvers
Motors

5A.3 General requirements. The work includes providing a combination electric motor driven and engine turbine type deep well pump at each well site, complete with all appurtenances. Each installation shall be complete and ready to operate. Equipment, materials, installation, and workmanship shall be in accordance with MIL-P-52029, Class A, and NFPA 37, except as specified or indicated otherwise.

5A.4 Well pumps shall be the vertical turbine type, oil or water lubricated and provided with a non reverse ratchet to prevent reverse rotation. Pumps shall have an efficiency of not less than 70 percent, and shall conform to AWWA E101. Pumps shall be provided with a combination right angle drive and auxiliary gasoline engine.

5A.4.1 Pumping Conditions. Speed of pumps shall not exceed 1,800 rpm. The total dynamic head shown on the drawings includes the discharge head at the discharge flange of the pump plus a fifty foot lift in the well. Should the actual lift in the well, as determined by flow tests of the completed wells differ sugnificantly from this valve, the provisions respecting an adjustment for changed conditions shall apply, subject to the requirements of notification thereunder being given. Pumps shall be provided with sufficient column and line shaft to prevent breaking suction.

5A.4.2 Pump heads shall be constructed from close grained cast iron and shall be heavy duty type designed for hollow shaft drive. Pump shall have flanged above ground discharge.

5A.4.3 Pump Columns shall be standard weight zinc coated seamless steel pipe conforming to ASTM A53 or A120 and shall be in sections not to exceed 10 feet in length and of proper diameter eliminate undue friction when pumping at pump capacity.

5A.4.4 Line shafts shall be high grade ground and polished steel and not be less than 1-3/16 inches in diameter. The shaft shall be provided in interchangeable sections not over 10 feet in length and fastened with threaded steel couplings having a strength of not less than 100 percent of the strength of shaft after being assembled. The ends shall be machine finished and undercut for proper butting of the shaft. All threads shall be lathe cut.

5A.4.5 Bearings. The pumping unit shall have sufficient guide bearings to maintain the alignment of the pump and shafting and to prevent vibration. The inner column couplings shall be bronze and shall act as bearings for the line shaft which shall be turned and polished. Oil lubricated bearings shall be provided with oil grooves to effect passage of oil down through the entire length of oil tube and shafting. An automatic lubricator with capacity sufficient for one week of continuous 24 hour operation shall be provided to feed oil to the bearings. Lubricator shall have sight glass and feed adjustment.

5A.4.6 Pump bowls shall be made of close grained cast iron, free from blow holes and all other defects which would impair their strength or durability for the service, and shall be lined with vitreous porcelain enamel. Bowls shall have smooth curved vanes to efficiently direct the flow of water and to prevent air locking. The bowls shall be of suitable thickness and strength to withstand the shut off pressure of the unit. Bowls shall be fastened together in such a manner that accurate alignment is assured and maintained. Guide passages for water shall be so designed and finished as to reduce friction to a minimum.

5A.4.7 Impellers shall be of the enclosed type, of heavy bronze construction. Each impeller shall be accurately fitted and perfectly balanced both dynamically and hydraulically. Impeller shaft shall be of the high grade stainless steel, carefully ground and polished and furnished with lathe cut threads. No keyways shall be cut into the shaft. Impeller shall have non-loading characteristics and shall have head characteristics as steep as possible so that an increase or decrease in the operating head above the design point will not cause an excessive decrease or increase in pump capacity. Impellers shall be attached and locked to pump shaft in such a manner that they may easily be removed, and that they shall not work loose for any reason.

5A.4.8 Suction pipe and strainer. A suction pipe of standard weight zinc coated seamless steel pipe conforming to ASTM A53 or A120, 6 inches diameter and 10 feet long shall be provided for each pump. A galvanized strainer having an inlet opening area of at least five times the area of the suction pipe shall be provided at the lower end of the suction pipe.

5A.4.9 Motors. Shall be a hollow shaft, vertical, fully enclosed electrical motor and shall be squirrel cage induction type and shall have ample capacity to operate the pump properly through its entire head capacity range without exceeding its rated capacity, but shall be not less than specified. The speed of the motor shall not exceed 1800 rpm. The motor shall have a non reverse ratchet.

5A.4.10 Auxiliary gasoline engines shall be multi-cylinder, water-cooled, heavy duty gasoline power plant with maximum horsepower at least 30 percent in excess of the maximum brake horsepower required to operate the pump continuously at its rated speed, over the entire head capacity range of the pump. Engine RPM shall not exceed 1800, and piston speed shall not exceed 1200 FPM. The engine shall be arranged for electric motor cranking and shall be equipped with a high tension ignition system, battery and required appurtenances, shall include an adjustable governor, carburetor, tachometer, oil pressure gauge, cylinder temperature gage, gasoline pump and filter, gravity fuel tank, air cleaner, oil filter, generator, starting crank, radiator, exhaust pipe and muffler, and clutch take off assembly. Engine shall conform to applicable portions of MIL-P-52029.

(a) Battery charger, electric type, shall be mounted on wall of pump house and shall be the rectifier type for operation with 120 volt 60 hertz. Charger shall be protected by an automatic circuit breaker and shall have capacity to charge two 6 volt batteries or one 12 volt battery at eight to five amps. One direct current ammeter shall be included and shall be flush mounted on the front of the enclosure. All metal parts shall be corrosion resistant or shall be suitably protected against corrosion.

(b) Exhaust piping shall be extra strong black steel pipe conforming to ASTM A53 or A120. Piping shall have screwed or welded fittings; fittings shall conform to ANSI B16.3. Welding shall be in accordance with ANSI B31.1, including qualification of welders. Certifications of each welder's qualifications shall be submitted to the OICC. Flanges shall be provided for final connections to engines, exhaust mufflers and flexible connections. Gaskets shall be 1/16 inch thick asbestos packing conforming to HH-P-46. Pipe sleeves shall be provided where piping passes through walls. Sleeves shall be standard weight zinc coated steel pipe and shall be held securely in proper position and location during construction. Sleeves shall be of sufficient length to pass through entire thickness of walls. Space between the pipe and the sleeve shall be firmly packed with asbestos packing.

(c) Engine exhaust mufflers (silencers) shall have flanged connections and shall be provided in accordance with the engine manufacturer's recommendations for residential class silencing.

(d) Metal instruction plate shall be mounted on the engine unit giving the manufacturer's recommendations for lubricating oil and other pertinent information.

(e) Safety guards. The interconnecting shafting between the gasoline engine and the combination drive and all other rotating units shall be provided with approved safety guards for protection of operating personnel.

(f) Ductwork shall be provided in a neat workmanlike manner. Ducts shall be constructed of zinc-coated sheet steel conforming to ASTM A525 coating designation G 90. Ducts and accessories shall be constructed, braced, reinforced and installed in accordance with NFPA 90A, SMACNA duct manufals, and ASHRAE guide and data books. Rectangular ducts shall be cross broken. Duct supports shall be not less than 1/8 inch by 1 inch zinc coated flat bar. Slip joints shall be made in the direction of flow. Ducts shall be true to the dimensions indicated, and shall be straight and smooth on the inside with neatly finished air-tight joints. The ducts shall be securely anchored into the building construction in an approved manner and shall be completely free from vibration under all conditions of operation.

(g) Flexible duct connectors shall be provided at duct connections to each engine radiator. Connectors shall be supported at each end by metal angle frame bands, securely bolted in place as to be air-tight. Duct connectors shall be asbestos cloth conforming to SS-C-466, Form 1, Grade AAA, Style 1.

(h) Automatic opening gravity closing type louvers shall conform to MIL-L-18145.

(i) Fuel tank (day tank) shall be provided with the auxiliary engine. Tank shall have a capacity of not less than 4 hours operation of the engine at full load. The tank shall be anchored, braced, and supported adequately to preclude vibration in service. An all-bronze shut-off plug cock shall be provided in the fuel line to the engine. Tank shall be provided with a direct-reading fuel gage. Tank shall be welded steel construction conforming to NFPA 37 and shall bear label of Underwriter's Laboratories, Incorporated.

5A.5 Magnetic motor starters shall be of the full voltage across the line type. Starters shall be of the quick break type having a low voltage and thermal overload release and hand reset device. Starters shall have hand off automatic switch and shall be provided under the division entitled "Electrical". Starter shall have lockout relay to prevent automatic restart of electric motor if electrical service is restored while auxiliary gasoline engine is operating.

5A.6 Pump characteristics curve. The Contractor shall furnish with each pump and drive prior to shipment, certified characteristics curves showing the capacity, head, efficiency, and brake horsepower throughout the entire range of the pump.

5A.7 Controls. The existing control system consists of a surge tank with pressure switches at each well. Surge tanks are 42 gallon vertical steel tanks, 16 inches in diameter by 48 inches high. Pressure switches are Honeywell Pressuretrol type L404A34X4. Each new well shall be provided

with a control system similar to those existing and compatible with the existing system, except that an air volume control system shall be provided. The existing tanks in the two abandoned well houses may be reused. The existing pressure switch in Building M-244 may be reused, but a new pressure switch shall be provided for M-627. Interconnecting piping from the pump discharge piping to the surge tanks shall be standard weight zinc coated steel pipe conforming to ASTM A53 or A120 with zinc coated malleable iron screwed fittings conforming to ANSI B16.3. Air volume control system shall be an "Add-Air" type including an electric driven air compressor and a probe type high level sensor. The probe shall maintain air in the surge tank by starting the air compressor at any time when the water level in the tank rises and contacts the probe. The probe shall be 24 inches long and shall have a brass housing and brass probe rod. The housing shall contain a relay which closes when liquid touches the probe, starting the compressor. The relay circuit shall include a 30 second time delay to delay compressor start to prevent short cycling and false operation due to surges and hammer.

The air compressor shall be a single stage, piston-type, base mounted, belt driven electric driven compressor with a capacity of 0.8 SCFM at 80 psi discharge pressure. Motor shall be 1/4 horsepower, 120 volts, single phase, 60 hertz. Compressor unit shall conform to applicable portions of MIL-C-17596.

END OF SECTION 5A

DIVISION 6 SPECIAL CONSTRUCTION

SECTION 6A Prefabricated Metal Buildings

6A.1 Applicable publications. The following publications of the issues listed below, but referred to elsewhere by basic designation only, form a part of this specification to the extent indicated by the references thereto (where a number is suffixed to the specification number, it denotes the effective amendment to the specification):

(a) Federal and Military Specifications.

TT-G-410E	Glazing compound, sash (metal) for bedding and face glazing
DD-G-451c	Glass, plate, sheet, figured(corrugated and float, for glazing mirrors, and other uses)
FF-H-00106B91	Hardware, Builder's locks and door trim
FF-H-1106	Hinges, hardware, builder's.
RR-D-575B	Door, metal sliding and swinging; door frame metal (flush and semi flush)
QQ-S-775d	Steel sheets, carbon, zinc coated.
TT-P-645	Primer, paint, zinc chromate, alkyd type
MIL-S-4174B	Steel sheet and strip, flat, aluminum coated, low carbon.
MIL-P-6883A	Paint, blended type, coal tar pitch base, bituminous
MIL-P-15328B	Primer,pretreatment (formula No. 117 for metals)
MIL-C-18969B	Calking compounds, metal seam and wood seam

(b) Non-Government Specifications and Standards.

American Society for Testing and Materials(ASTM)

B117-64	Salt spray (fog) testing.
E96-66	Water vapor transmission of material in sheet form.
D822-60	Operating light and water exposure apparatus for testing paint, varnish, lacquer and related products.

Architectural Aluminum Manufacturers Association (AAMA)

302.7-1971 (2nd edition) American National Standard Specification for aluminum windows (ANSI A134.1)

American Institute of Steel Construction (AISC)

Design, fabrication, and erection of structural steel for buildings (Sixth Edition)

American Iron and Steel Institute (AISI)

Light gage cold formed steel design manual - 1962

American Welding Society (AWS)

Standard code for arc and gas welding in building construction.

Metal Building Manufacturers Association (MBMA)

Recommended design practices manual - 1971

Steel Window Institute (SWI)

Recommended specification for steel windows - 1969, with 1970 supplement.

6A.2 General requirements. Prefabricated metal building(s) shall be the product of a manufacturer who is regularly engaged in the manufacture of prefabricated metal buildings. The buildings shall have clear spans and shall be of the self framing type.

6A.2.1 Assembly and disassembly. The size of the prefabricated components and the necessary field connections required for erection shall be such as will permit easy assembly and disassembly by means of the building manufacturer's standard fasteners and construction tools. The maximum size of any shop-assembled component of the buildings shall be such as will permit transportation from factory to site by commercial carrier. Components of the metal buildings shall be fabricated in such manner that once assembled, they may be disassembled, packaged, and reassembled with a minimum amount of labor and maximum salvageability. Each and every piece and part of the assembly shall be clearly and legibly marked to correspond with previously prepared erection drawings, diagrams, and/or instruction manuals.

6A.2.2 Storage and protection. Prefabricated components, sheets, panels, and other manufactured items shall be delivered, stored, and handled, and erected in such a manner that they will not be damaged or deformed. Materials stored on the site before erection shall be stacked on platforms or pallets and covered with tarpaulins or other suitable weathertight covering. All metal sheets or panels shall be stored so that water which might have accumulated during transit or storage will drain off; the sheets or panels shall not be stored in contact with materials that might cause staining. Upon arrival on the job site; the sheets or panels shall be inspected; if found wet, the moisture shall be removed and the sheets or panels shall be re-stacked and protected until used.

6A.2.3 Design requirements. Unless specified otherwise herein, the design of all prefabricated metal buildings shall be in accordance with the Metal Building Manufacturers Association's "Recommended Design Practices Manual". If required, the Contractor shall submit for approval the engineering design calculation and stress diagrams of all structural or load bearing components.

(a) Normal design loads. The vertical live loads, in addition to the applicable dead loads, shall be applied on the horizontal projection of the roof structure. The wind load on the buildings shall be proportioned and applied as horizontal and uplift velocity pressures. The maximum deflection in roofing or roof panels shall not exceed 1/180th of the span, and the maximum deflection in siding or wall panels shall not exceed 1/90th of the span.

(b) Auxiliary loads. Superimposed dynamic and/or static loads shall be applied in addition to the normal design loads and shall be considered in combinations with normal design loads.

6A.3 Materials and components.

6A.3.1 Steel framework shall be in accordance with the Steel Construction Manual of the American Institute of Steel Construction. Steel framing less than 3/16 inch thick shall be in accordance with the American Iron and Steel Institute's Light Gage Steel Design Specification. Prefabricated sections of the framework shall be designed to assure easy packing, shipping, erection, dismantling, repacking, and re-erection, and shall be assembled in a manner which will assure the maximum strength and rigidity. Approved structural members, or structural assemblies, having cross sectional areas and/or connections that differ from the section and connections indicated may be used, if the proposed framework adequately meets design requirements.

6A.3.2 Siding and roofing (sheets or panels) shall be either steel or aluminum conforming to the following requirements. As far as practical, one type of siding and one type of roofing shall be used throughout the project.

(a) Steel sheets or panels shall be either zinc coated or aluminum coated. Zinc-coating for steel shall conform to the requirements of QQ-S-775, Class D. Aluminum coated steel shall conform to the applicable requirements of MIL-S-4174, type II, the siding or panels shall be either (1) the standard corrugated type, (2) the deep corrugated type, or (3) the panel type. The standard corrugated type shall have corrugations not less than 1/2 inch deep spaced not to exceed 2½ inches on centers. The deep corrugated type shall have corrugations, V-beams, ribs, channels, or other similar configurations not less than 1 inch deep spaced not to exceed 12 inches on centers or not less than 3/4 inch deep spaced not to exceed 6 inches on centers. The panel type shall have either (1) interlocking ribs not less than 3 inches deep spaced not greater than 16 inches apart, or (2) configuration not less than 1½ inches deep spaced not greater than 12 inches apart.

(b) Aluminum sheets or panels shall be manufactured from alloy 3003 alclad or 3004 alclad and shall be tempered as required to suit the respective forming operations. The minimum thickness shall be 0.032 inch (20 B&S gate). The sheets or panels shall be either (1) the standard

corrugated type, (2) the deep corrugated type, or (3) the panel type. The standard corrugated type shall have corrugations not less than 7/8 inch deep spaced not to exceed 2½ inches on centers. The deep corrugated type shall have corrugations, ribs, V-beams, Channels, or other similar configuration not less than one inch deep spaced not to exceed 12 inches on centers or not less than 3/4 inch deep spaced not to exceed 6 inches on centers. The panel type shall have either (1) interlocking ribs not less than 3 inches deep, spaced not greater than 16 inches apart, or (2) configurations not less than 1½ inches deep, spaced not greater than 12 inches apart.

6A.3.3 Fasteners for securing sheets and panels. Fasteners for attachment to structural supports and fasteners for attachment to adjoining sheets or panels shall be as approved, and in accordance with the manufacturer's recommendations. Unless specified otherwise herein, the fasteners shall be either self tapping screws, bolts and nuts, self locking rivets, self locking bolts, and welded studs, bolted or riveted studs, or step rivets held by aluminum straps. Other types of fasteners of the building manufacturer's standard type may be used if prior approval is obtained. The fastening system shall be designed to withstand the design loads specified hereinbefore. Fasteners shall be stainless steel, cadmium plated steel, or aluminum. All fasteners, with the exception of those having integral Hex washer heads and those having aluminum drive caps, shall have composite metal and polymerized chlorphene washers. Fasteners having aluminum drive caps shall have polymerized chlorphene washers. Side laps of roofing sheets or panels having configurations 3/4 inch deep, or less shall be fastened at a maximum spacing of 12 inches on centers.

6A.3.4 Sheet metal accessories. As far as practical, zinc coated steel accessories shall be provided with zinc coated siding or roofing, and aluminum accessories shall be provided with aluminum alloy siding and roofing. Zinc coating for all sheet steel accessories shall conform to QQ-S-775, Class d. All aluminum accessories shall be of the alloy and temper necessary to suit forming requirements.

(a) Caps, strips, and plates . Ridge caps, eave and edge strips, fascia strips, miscellaneous flashings, and miscellaneous sheet metal accessories, unless specified otherwise, shall be formed from the same material and gage as the roof covering. Wall plates, base angles or base channels, and other miscellaneous framing members may be standard structural steel shapes, or they may be formed from steel not lighter than 16 gage.

6A.3.5 Miscellaneous accessories.

(a) Closure strips shall be formed of approved compressed rubber, synthetic rubber, bituminous impregnated materials, or metal of the same respective type as the roofing and siding, and as standard with the manufacturer. Molded closure strips shall be free of open voids and shall not absorb or retain water. Closure strips shall be formed to match the corrugations or configurations of the roofing or siding being used and shall be provided where indicated and where necessary to provide weathertight construction.

(b) Joint sealing material. All side and end laps shall be sealed with Type I, Class B ribbon form sealant conforming to the performance characteristics of MIL-C-18969. Minimum sizes of ribbons shall be 3/32 inch by 1/2 inch for rectangular areas and 1/4 inch diameter for circular areas. All joints at doors, windows, accessories, and flashings shall be sealed in a manner similar to the sealing of sheets and panels. Bituminous type sealing materials shall not be used with painted sheets and panels.

6A.3.6 Doors shall conform to RR-D-575, type III, full flush. Metal frames shall be provided as standard with the manufacturer. Each door shall be furnished with 3 hinges, type T2107 USP, 4½ inches by 4½ inches conforming to FF-H-116 and one lockset conforming to FF-H-00106, type 161A-4 US10.

6A.3.7 Metal windows shall be complete, including frames, sash, flashings, hardware, operating devices, fastening devices, clips, and all other appurtenances necessary for a complete installation and for proper operation. At the option of the Contractor, the windows shall be either steel or aluminum.

(a) Steel windows shall be standard commercial projected type, conforming to the applicable requirements of the steel window specifications of the Steel Window Institute, except as specified otherwise herein. Steel windows shall be given a phosphoric acid treatment and a factory applied prime coat of an approved rust-inhibitive primer, of a type standard with the window manufacturer.

(b) Aluminum windows shall be type P-A2-HP, conforming to the applicable requirements of the aluminum window specifications of the Aluminum Window Manufacturers Association, except as specified otherwise herein. The minimum metal thickness for principal members of solid section windows shall be 1/8 inch.

(c) Window lintels, heads, jambs, and sills shall be a type standard with the metal building manufacturer, and shall be constructed to be connected, or interlocked, and with the adjoining wall covering material in an approved manner. The edges of the wall covering shall be reinforced as necessary to form jambs or strength and rigidity which adequately meet design criteria. Lintels, heads, and sills shall be formed from the same type of sheet metal as the wall covering, except that extruded aluminum may be used with aluminum windows. Structural steel frames and/or lintels may be provided in lieu of sheet metal or extruded aluminum frames and/or lintels, if such construction is standard with the metal building manufacturer. Sheet metal and extruded aluminum lintels, heads, and sills shall be contoured to serve as combination framing and flashing.

(d) Operation of windows. Ventilators within reach of the floor shall be operated by means of handles or push bars; those more than six feet above the floor shall be operated by means of poles. Hardware for all windows shall be of plain pattern, and of malleable iron or steel of the manufacturer's standard type.

6A.3.8 Shop painting. All ferrous metal work, except factory finished work, zinc coated work, aluminum coated work, and work specified to be painted hereinbefore, shall be (1) cleaned of all dirt, rust, scale, loose particles, grease, oil, and other deleterious substances, (2) given a coat of pretreatment primer conforming to MIL-P-15328, applied to a dry film thickness of 0.3 to 0.5 mil or chemically treated with a phosphoric type cleaner, and (3) then be given one coat of an approved rust inhibiting primer paint of the type standard with the metal building manufacturer.

6A.3.9 Factory finishing. Exterior and interior exposed surfaces of metal roofing, metal siding, roof ventilators, louvers, gutters, downspouts and metal accessories shall be provided with a factory applied baked on enamel finish. The finish shall consist of cleaning, pretreatment with a chemical conversion coating and one coat of baked on synthetic enamel applied to a dry film thickness of not less than 1 mil.; color shall be as selected. The Contractor shall furnish the Officer in Charge of Construction certified test reports from approved laboratories showing the type of sheets being furnished have been tested and have passed the following tests:

(a) Salt spray test. A 12 inch by 12 inch sample of the siding and roofing, with a minimum of two raw cut edges, shall withstand a salt spray test for a minimum of 1,000 hours in accordance with ASTM B117. Undercutting of the paint film from the score line shall not exceed 1/16 inch.

(b) Accelerated weathering test. A 12 inch by 12 inch sample with a minimum of two raw cut edges shall withstand a weathering test a minimum of 1,000 hours in accordance with ASTM 822 without checking, cracking or loss of adhesion.

(c) Flexibility. When formed over a conical mandrel, the film shall show no crack beyond a point where the mandrel diameter is equal to five times the metal thickness.

(d) Adhesion. There shall be no film removed by pulling off sharply No. 600, 3/4 inch wide scotch cellophane tape applied to 10 parallel cuts spaced 1/16 inch apart plus 10 similar cuts at right angles. Cuts shall be made with a sharp knife.

(e) Field tests. At the discretion of the OICC sample sheets for tests may be taken at random from each delivery or from stockpiles on the site at any time during the construction period. Tests may be made to check the conformance of the materials with the above acceptance tests and with other requirements specified herein. Failure of the sample sheets to pass all of the required tests shall be cause for rejection of all sheets represented by the samples.

6A.3.10 Dissimilar materials. Where aluminum surfaces come in contact with ferrous metal or other incompatible metals, the aluminum surfaces shall be kept from direct contact by one of the following methods:

(a) Painting the incompatible metal with a coating of heavy

bodied bituminous paint conforming to MIL-P-6883;

(b) Painting the incompatible metal with a prime coat of zinc-chromate primer conforming to TT-P-645, followed by one or two coats of aluminum metal and masonry paint, or other suitable protective coating, excluding those containing lead pigmentation;

(c) An approved nonabsorptive gasket;

(d) An approved calking placed between the aluminum and the incompatible metal.

If drainage from incompatible metal passes over aluminum, the incompatible metal shall be painted by method (a) or method (b), Aluminum surfaces in contact with concrete or masonry materials shall be painted by method (a). Green or wet wood, or wood treated with incompatible wood preservatives, shall be painted by method (a) or shall be given two coats of aluminum paint.

6A.3.11 Glazing. Glass shall conform to DD-G-451. Elastic glazing compound, conforming to TT-G-410, shall be used for glazing sash.

(a) Clear sheet glass, Type II, Class I, quality q6, double strength shall be used for glazing sash.

(b) Setting. All glass shall be bedded and back puttied, using the elastic glazing compound specified and shall be set without springing or forcing. Glass in sash shall be set with glazing clips and compound.

(c) Cleaning. Following the completion of the buildings, all glass shall be washed clean.

6A.3.12 Thermal insulation exposed on interior of buildings shall be either the flexible blanket type or the semi rigid type as standard with the metal building manufacturer and shall have a factory applied facing on one side. The insulation shall conform to the applicable requirements of specification HH-I-542, except as specified otherwise herein. Facing on insulation shall be vinyl scrim foil. Facing on flexible blanket type insulation shall have 2 inch tabs along both edges; facing on semi rigid type insulation shall have 2 inch tabs along one edge or shall be sealed with 4 inch tape.

(a) Thermal value. Roof insulation shall have a "C" factor of 0.25 or less. Wall insulation shall have a "C" factor of 0.25 or less.

(b) Flame spread rating. The assembly of insulation and its facing shall bear Underwriters' Laboratories, Inc. labels indicating a flame spread of 20 or less. In lieu of labels, notarized test certificates from an approved testing laboratory, stating that the material has been tested by Underwriter's Laboratories, Inc., test methods and conforms to their requirements, will be accepted.

(c) Permeance rating. The insulation facing shall also serve as a vapor barrier and shall have a permeance rating of 0.05 perm or less when tested in accordance with ASTM test method E96. Testing requirements may be waived in cases where notarized test certificates stating the successful results of previous tests on material of the same make, type, and quality are received from an approved testing laboratory.

6A.4 Erection. Concrete foundations and floor slabs shall be level and true, and shall be inspected and approved before the structural steel work is started. Anchor bolts shall be installed while the concrete work is in progress; templates or other gaging devices shall be used to assure accurate spacing of the anchor bolts. Defects or errors in the fabrication of building components shall be corrected by the Contractor in an approved manner. Defects or errors in fabrication of components, which can not be corrected in an approved manner, shall be replaced by nondefective members at no additional cost to the Government. Columns, rigid frames, and walls of self framing buildings shall be plumbed in both directions, guyed and stayed, and all framing elements shall be accurately spaced to assure the proper fitting or prefabricated wall and roof coverings.

6A.4.1 Rigid frames, column bases, and sill members shall be set accurately, using a non shrinking grouting mortar to obtain uniform bearing on the concrete and to maintain a level base line elevation. Anchors and anchor bolts for securing rigid frames, columns, or sill members to foundations shall be steel, unpainted, set accurately to templates, and of proper size to adequately resist all applicable design loads at the base. Grouting mortar shall be a mixture of one part of bleanded portland cement, to two parts of well graded fine aggregate, and enough water to provide a maximum water cement ratio of 0.50. The bleanded portland cement shall be a mixture of cement with 1/4 ounce of aluminum powder to each sack of cement. Surfaces to receive the mortar shall be cleaned and moistened thoroughly immediately before placement of mortar. Exposed surfaces of mortar shall be water cured with wet burlap for 7 days.

6A.4.2 Wall construction. All sheets or panels shall be applied with the corrugations, V-beams, ribs, channels, or other configurations in a vertical position. Sheets or panels shall be supplied in full wall heights from base to eave with no horizontal joints except at the junctions of door frames, window frames, louver panels, and similar locations. All side and end laps shall be sealed with the joint sealing materials specified hereinbefore. All walls shall be flashed and/or sealed at the base, at the top, around windows, door frames, framed louvers, and all other similar openings. The placement of closure strips, flashing and sealing material shall be accomplished in an approved manner that will assure complete weathertightness. Flashing will not be required where approved "self flashing" sheets or panels are used. Minimum end laps for all types of sheets or panels shall be 2½ inches. Minimum side laps for all types of sheets or panels shall be one corrugation or one configuration.

6A.4.3 Roof construction. All roofing sheets or panels shall be applied with the corrugations, ribs, channels, or other configurations parallel to the slope of the roof. The roofing sheets or panels shall be supplied in full lengths from ride top to eaves on shed roofs with no transverse joints except at the junction of curbs, and similar openings. All side laps shall be laid away from the prevailing wind, and all side and end laps shall be sealed with the joint sealing material specified hereinbefore. The roof shall be flashed and sealed at the ridge, at eaves and rakes, at projections through the roof, and elsewhere as necessary. The placement of closure strips, flashing, and sealing material shall be accomplished in an approved manner that will assure complete weathertightness. The use of various types of roof covering in relation to roof slopes shall be as follows:

Roof Slope	
1:12	Deep corrugated or panel type only (Slopes less than 1:12 shall not be used)

Minimum side laps for roof covering shall be as follows:

Roof Covering	Minimum Side Laps
Deep corrugated type	One full corrugation or configuration
Panel type	One full configuration or interlocking rib

6A.4.4 Installation of insulation. Wall insulation shall be installed between girts and siding sheets or panels. Insulation shall be held rigid until secured in place. Facing shall be exposed on the interior side of the building. Facing tabs of flexible blanket type insulation shall be folded and stapled on 6 inch centers to completely seal joints. If folding and stapling is accomplished from the inside, the tabs shall be pushed neatly up between the edges of adjoining blankets. Facing tabs of semi-rigid type insulation, and joints between sheets shall be sealed with 4 inch wide tape made of the same material as the facing material. The adhesive used to seal tabs or tape of semi-rigid type insulation shall be fire resistant and moistureproof.

6A.5 Quality Control.

6A.5.1 Shop drawings, erection diagrams, and instruction manuals including anchor bolts plan, details of structural framework, structural connections, roofing, siding, fastening system, door openings, windows, other openings, flashing, sealing of joints, and other details of diagrams as necessary to augment erection instructions shall be supplied. Shop drawings shall be submitted and approved before prefabricated components are delivered to the site.

6A.5.2 Test and test reports. The testing requirements incorporated in referenced documents will be waived provided the manufacturer submits notarized certificates that previously manufactured materials have been tested

by recognized laboratories, that such materials meet testing requirements specified and that the tested material is of the same type, quality, manufacture, and make as that furnished for this project. Copies of the test reports need not be submitted.

END OF SECTION 6A

DIVISION 7 MECHANICAL

SECTION 7A Water Piping
7B Well Construction

SECTION 7A WATER PIPING

7A.1 Applicable publications. The following publications of the issues listed below, but referred to elsewhere by basic designation only, form a part of this specification to the extent indicated by references thereto (where a number is suffixed to the specification number, it denotes the effective amendment to the specifications):

7A.1.1 Federal Specifications.

WW-P-421c	Pipe, cast gray and ductile iron, pressure (for water and other liquids).
WW-V-51E(2)	Valve, angle, check, and globe, bronze (125, 150 and 200 pound, threaded ends, flange ends, solder ends, and brazed ends, for land use).
WW-V-54D(1)	Valve, gate, bronze (125, 150, and 200-pound; threaded ends, flange ends, solder end, and brazed ends, for land use).
WW-V-58B	Valves, gate, cast iron; threaded and flanged (for land use).

7A.1.2 Military Specifications.

MIL-V-18436c(1) Valves, check: bronze, cast-iron, and steel body.

7A.1.3 Non-Government Specifications and Standards.

American Society for Testing and Materials (ASTM)

A53-72a	Welded and seamless steel pipe
A120-72a	Black and hot dipped zinc coated (galvanized) welded and seamless steel pipe for ordinary purposes.

American Waterworks Association (AWWA):

C 106-70	Cast iron pipe centrifugally cast in metal molds, for water or other liquids.
C 108-70	Cast iron pipe centrifugally cast in sand-lined molds, for water or other liquids
C 151-71	Ductile iron pipe, centrifugally cast in metal molds or sand-lined molds, for water or other liquids.
C 110-71	Gray-iron and ductile-iron fittings, 2 in. through 48 in., for water and other liquids.
C 111-72	Rubber gasket joints for cast-iron and ductile-iron pressure pipe and fittings.
C 500-71	Gate valves - 3 in. through 48 in. - for water and other liquids.
C 600-64	Installation of cast-iron water mains.
C 601-68	Disinfecting water mains.

Underwriters' Laboratories (UL):

UL 194 1973	The performance of gasketed joints for cast iron pressure pipe and fittings.
UL 262 1973	Gate valves for fire protection service.
UL 312 1973	Swing check valves for fire protection service.

American National Standards Institute (ANSI):

A21.6-1970	Cast iron pipe centrifugally cast in metal molds for water or other liquids
A21.8-1970	Cast iron pipe centrifugally cast in sand lined molds, for water or other liquids
A21.10-1971	Gray-iron and ductile-iron fittings, 2 in. through 48 in., for water and other liquids.
A21.11-1972	Rubber gasket joints for cast-iron and ductile-iron pressure pipe and fittings.
A21.51-1971	Ductile iron pipe, centrifugally cast in metal molds or sand lined molds, for water or other liquids
B16.1-1967	Cast iron pipe flanges and flanged fittings, 25, 125, 250 and 800 lb.
B16.3-1971	Malleable iron screwed fittings, 150 and 300 pound.

National Fire Protection Association (NFPA):

24-73 Outside Protection

7A.1.4 LANTDIV Plates.

WD-1 Standard thrust blocks for water mains

7A.2 Quality Control. All field tests to determine conformance with the specified requirements shall be performed in the presence of the OICC.

7A.2.1 Material tests and test reports. The testing requirements for materials incorporated in referenced documents will be waived provided the manufacturer submits notarized certificates stating that previously manufactured materials have been tested by recognized laboratories, that such materials meet testing requirements specified, and that the materials furnished for this project are of the same type, quality, manufacture and make as that tested. Copies of the test reports need not be submitted except as specifically requested by the OICC.

7A.2.2 Shop drawings and catalog data. Shop drawings and catalog data for the following items shall be submitted and approved before delivery of such items to the site. The drawings and data shall show materials, finish and all pertinent details. Shop drawings and data to be submitted shall include valves and valve boxes.

7A.3 Delivery, Storage, and Protection. Materials shall be delivered to the site in an undamaged condition. Materials shall be carefully stored to provide proper protection against damage. Defective or damaged materials shall be replaced by the Contractor at no expense to the Government. Handling requirements are specified hereinafter.

7A.4 Materials.

7A.4.1 Pipe. Water piping 4 inches in diameter and larger shall be cast iron. Water piping 3 inches in diameter shall be either cast iron piping or zinc coated steel. In lieu of 3-inch pipe, fittings and valves 4 inch pipe, fittings and valves may be used. Water piping less than 3 inches in diameter shall be zinc coated steel.

7A.4.1.1 Cast iron pipe shall conform to the application requirements of WW-P-421 for Grade A, B, or C, Class 150. Pipe shall have cement-mortar lining and shall have ends suitable for joints specified hereinafter.

7A.4.1.1.1 Gray cast iron pipe shall conform to the applicable requirements of ANSI A21.6 (AWWA C106) or ANSI A21.8 (AWWA C108), except as modified by WW-P-421.

7A.4.1.1.2 Ductile iron pipe shall conform to the applicable requirements of ANSI A21.51 (AWWA C151), except as modified by WW-P-421.

7A.4.1.2 Steel pipe shall be standard weight zinc-coated steel pipe conforming to ASTM A53 or A120.

7A.4.2 Fittings.

7A.4.2.1 Fittings for cast gray and ductile iron pipe shall conform to the applicable requirements of ANSI A21.10 (AWWA C110); fittings with push-on joint ends shall be as specified for bell-and-spigot joint ends except that bell design shall be modified, as approved, for push-on joints. Fittings shall have pressure rating at least equivalent to that of the pipe. Fittings shall have cement mortar lining equivalent to that of the pipe lining.

7A.4.2.2 Fittings for steel pipe shall be zinc coated malleable iron, screwed fittings conforming to ANSI B16.3.

7A.4.3 Joints and jointing materials.

7A.4.3.1 Cast Gray and Ductile Iron pipe. Piping below ground shall have push-on or mechanical joints. Piping above ground shall have flanged joints.

(a) Push-on joints. Shape of pipe ends shall conform to the applicable requirements of WW-P-421 for Type II pipe. Conformation of ends for fittings shall conform to the applicable requirements of ANSI A21.11 (AWWA C111). Gaskets and lubricants for pipe and fittings shall conform to the applicable requirements of ANSI A21.11 (AWWA C111). Drawings of the joint and gasket shall be furnished. Push-on joints shall also meet the applicable requirements of UL 194.

(b) Mechanical joints. Dimensional and material requirements for pipe ends, glands, bolts and nuts, and gaskets shall conform to the applicable requirements of ANSI A21.11 (AWWA C111) or to the applicable requirements specified for Type III pipe in WW-P-421. Mechanical joints shall also meet the applicable requirements of UL 194.

(c) Flanged joints. Ends of pipe and fittings shall be provided with cast-iron flanges conforming to the applicable requirements of ANSI A21.10 (AWWA C110), except that the flanges for pipe shall be screwed-on type with threads conforming to ANSI B16.1 for 125-pound class: Bolts, nuts, and gaskets for flanged connections shall conform to the applicable requirements of ANSI B16.1. Gaskets shall be plain rubber, 1/8 inch thick.

(d) Adapters. Adapters shall be provided for connections of cast iron pipe to flanged accessories.

7A.4.4 Valves. Valves conforming to the same specification shall be of one make throughout the project.

7A.4.4.1 Gate valves.

7A.4.4.1.1 Gate Valves on Buried Piping. Valves shall have non-rising stems and shall be double-disc parallel seat type. Valve shall open by counterclockwise rotation of the valve stem. Stuffing boxes shall be bolted and constructed so as to permit the easy removal of parts for repairs.

7A.4.4.1.1.1 Valves 3-inch size and larger. Except as otherwise specified hereinafter, valves shall conform to AWWA C500 or to UL 262. Valves shall have mechanical joint or push on joint ends and gaskets conforming to ANSI A21.11 (AWWA C111), except as follows: Valves may have special ends, as approved for use with sleeve-type or clamp type mechanical couplings; such valve ends and gaskets shall conform to the applicable requirements specified in the respective paragraphs for these joints. Valves conforming to UL 262 shall be designed for a hydraulic working pressure of 175 psi.

7A.4.4.1.2 Gate Valves in Above-Ground Locations.

7A.4.4.1.2.1 Valves 3 inch size and larger. Valves shall conform to WW-V-58 or to UL 262. Valves shall be of the outside-screw-and-yoke configuration. Valves shall have flanged ends unless otherwise indicated or otherwise specified hereinafter. Valves conforming to WW-V-58 shall be Type II, Class I. Valves conforming to UL 262 shall be designed for a hydraulic working pressure of 175 psi.

7A.4.4.1.2.2 Valves Smaller than 3 inch Size. Valves shall conform to either WW-V-54, WW-V-58, or to UL 262. Valves conforming to WW-V-54 shall be Type III, Class A. Valves conforming to WW-V-58 shall be Type II, Class I. Valves conforming to UL 262 shall be of outside-screw-and-yoke configuration and shall be designed for a hydraulic working pressure of 175 psi. Valves shall have threaded ends.

7A.4.4.2 Check Valves.

7A.4.4.2.1 Check Valves 3 inch Size and Larger. Valves shall conform to MIL-V-18436 or to UL 312. Valves shall have flanged ends. Swing-check valves shall have clear-port opening. Valves conforming to MIL-V-18436 shall be Type III, shall have cast-iron or steel bodies with bronze trim, and shall be designed for a hydraulic working pressure of 175 psi.

7A.4.4.2.2 Check Valves Smaller Than 3-inch size. Valves shall conform to either WW-V-51, MIL-V-18436 or UL 312. Valves shall have threaded ends. Valves conforming to WW-V-51 shall be Type IV, Class A. Valves conforming to MIL-V-18436, shall be Type III, shall have cast iron or steel bodies with bronze trim, and shall be designed for a hydraulic working pressure of 175 psi.

7A.4.4.3 Combination Back pressure-check valve shall be installed at the discharge of each well pump. The valve shall maintain a constant upstream pressure regardless of fluctuations in the demand, and shall also close tight when pressure reversal occurs. The main valve shall be a hydraulically operated pilot controlled, diaphragm type globe valve. The valve stem shall be guided at both ends by a bearing in the valve cover and an integral bearing in the valve seat. The main valve shall have a single removable seat and a renewable resilient disc. No external packing glands will be permitted, the diaphragm must not be used as a seating surface and there shall be no pistons operating the main valve or any pilot controls. The pilot control shall be a direct-acting, adjustable spring loaded, diaphragm valve, designed to permit flow when controlling pressure exceeds the spring setting. A system of auxiliary check valves shall be used to pack downstream pressure in the main valve cover chamber if pressure reversal occurs. This must result in positive closing of the main valve. Valve shall be iron body bronze mounted, Class 125.

7A.4.5 Valve Boxes. Each gate valve on buried piping shall be provided with an adjustable cast iron or plastic valve box of a size suitable for the valve on which it is to be used. The head shall be round and the lid shall have the word "WATER" cast on it. The least diameter of the shaft of the box shall be 5¼ inches. Each cast iron box shall be given a heavy coat of bituminous paint.

7A.5 Requirements. Work in this section includes all water distribution systems.

7A.5.1 Handling. Pipe, fittings, valves and other accessories shall be handled in such manner as to insure delivery to the trench in sound, undamaged condition. Especial care shall be taken not to injure pipe coatings or linings. If coatings of linings of pipe fittings are damaged, satisfactory repairs shall be made at no extra cost to the Government. Pipe shall be carried to the trench and not dragged. Rubber gaskets that are not to be installed immediately shall not be left in the sunlight, but shall be stored under cover out of direct sunlight.

7A.5.2 Pipe laying and jointing. Pipe, fittings, valves and accessories will be carefully inspected before and after installation and those found defective will be rejected. Pipe and fittings shall be free from fins and burrs. Before being placed in position, pipe, fittings, valves, and accessories shall be cleaned, and shall be maintained in a clean condition. Proper facilities shall be provided for lowering

sections of pipe into trenches. Under no circumstances shall pipe, fittings, valves, or any other water line material be dropped or dumped into trenches. Pipe shall be cut accurately to measurements established at the site and shall be worked into place without springing or forcing. Piping that does not allow sufficient space for proper installation of jointing material shall be replaced by one of proper dimensions. Blocking or wedging between bells and spigots will not be permitted. Bell-and-spigot pipe shall be laid with the bell end pointing in the direction of laying. The pipe shall be graded in straight lines, taking care to avoid the formation of any dips or low points. Pipe shall be supported at its proper elevation and grade, care being taken to secure firm and uniform support. Wood support blocking will not be permitted. The full length of each section of pipe and fittings shall rest solidly on the pipe bed, with recesses excavated to accommodate bells, joints, and couplings. Anchors and supports shall be provided where necessary and where indicated on the project drawings for fastening work into place. Proper provision shall be made for the expansion and contraction of pipe lines. Trenches shall be kept free of water until joints have been properly made. Open ends of pipe at the end of each day's work shall be closed temporarily with wood blocks or bulkheads. Pipe shall not be laid when the conditions of trench or weather are unsuitable. Depth of bury shall be not less than three feet. Piping shall be inspected, tested, and approved before being completely buried, covered, or concealed.

7A.5.5 Manufacturer's Recommendations. Where installation procedures or any part thereof are required to be in accordance with the recommendations of the manufacturer of the material being installed, printed copies of these recommendations shall be furnished to the Officer in Charge of Construction prior to installation. Installation of the item will not be allowed to proceed until the recommendations are received. Failure to furnish these recommendations can be cause for rejection of the material.

7A.6 Installation.

7A.6.1 General. Installation of pipe shall be in accordance with paragraph entitled "Requirements" hereinbefore and as specified hereinafter. Excavation, bedding, and backfilling of pipe trenches shall be as specified in section entitled "Earthwork" except as modified herein. Pipe shall be laid flat on the bottom of trench without blocks. Cast-iron pipe shall be installed in accordance with AWWA C600 except as modified herein.

7A.6.2 Joints.

7A.6.2.1 Joints for Cast-iron pipe. Push-on and mechanical joints shall be made in accordance with the requirements of AWWA C600; mechanical joints shall, further follow the "Notes on Installation of Mechanical Joints" given in ANSI A21.11 (AWWA C111). Flanged-joints shall be made up tight, care being taken to avoid undue strain on flanges, valves, fittings, pump nozzles, and other equipment and accessories.

7A.6.3 Connections to Existing water Systems. The Contractor shall furnish all material required to make connections into the existing water supply systems; and shall perform all necessary excavating, backfilling and other incidental labor as required. The OICC shall be notified in writing at least ten days prior to the date of the connections are required. Approval by the OICC shall be received before any service is interrupted.

7A.6.4 Pipe Anchorage. Anchorage of buried pipe lines shall be by means of concrete thrust blocks (reaction backing), using concrete with a minimum compressive strength of 2000 psi. All 1/16 and sharper bends, tees, and dead ends of pipe shall be securely blocked in the direction of flow with poured-in-place concrete bearing solidly against the pipe and affording a minimum of 3 square feet of bearing area against a vertical trench face for 3- and 4-inch pipe, and in accordance with LANTDIV Plate WD-1 for piping 6-inch diameter and larger. Plate WD-1 appears at the end of this section.

7A.6.5 Setting Valves and Valve Boxes. Valves and valve boxes shall be set plumb, and centered, with valve boxes placed directly over the valves. Valve boxes shall, if possible, be located outside the area of the roads and streets. Earth fill shall be carefully tamped around the valve box to a distance of 4 feet on all sides of the box, or to the undisturbed trench face if less than 4 feet. Valves shall have the interiors cleaned of all foreign matter before installation. Stuffing boxes shall be tightened and the valve shall be inspected in opened and closed positions to see that all parts are in working condition.

7A.7 Disinfection. New water piping and existing water piping affected by the Contractor's operations including all valves, fittings, and other devices connected thereto, shall be disinfected with a solution containing not less than 50 parts per million of available chlorine. The chlorinating material shall be liquid chlorine gas-water mixture, calcium hypochlorite, sodium hypochlorite, or chlorinated lime and water mixture conforming to AWWA C601 and shall be introduced into the system in an approved manner. The disinfecting solution shall be allowed to remain in the system for a minimum period of 24 hours or until the system is pronounced safe by the OICC. During the disinfecting period all valves and outlets shall be opened and closed several times. Where practicable, the new system shall be isolated from the existing by closing the nearest existing gate valves before the connection is made. All new piping and accessories shall be disinfected before connection to the existing system. Existing piping shall not be cut until new piping is ready for connection. The affected existing water piping may be considered to be only that adjacent to the connection, provided extreme cleanliness and care are used and provided samples taken from the existing system, upon completion of the work, show the water to be safe for human consumption. In addition to the disinfection specified hereinbefore, the pipe and fittings used in the connection and the interior of piping adjacent to the connection shall be thoroughly cleaned and sprayed or washed in a mixture containing not less than 200 parts per million of available chlorine. After disinfection, the solution shall be flushed from the system

with clean water until residual chlorine content is not greater than 0.2 parts per million, or not greater than the residual chlorine content of the flushing water. Should the samples show contamination, the entire system and that part of the existing system showing any contamination shall be disinfected as specified for new piping. After the system has been flushed, additional samples will be taken and tests made; if the water is found unsafe for human consumption, the disinfection procedure specified hereinbefore shall be repeated.

7A.8 Identification tags and plates. Valves shall be provided with tags or plates numbered and stamped for their usage. Plates and tags shall be of brass or suitable nonferrous material and shall be securely mounted or attached.

7A.9 Field Testing and Inspection.

7A.9.1 General. All work shall be provided to be in first class condition and constructed properly in accordance with the drawings and specifications. All defects and leaks disclosed by the tests shall be corrected. Piping shall not be completely buried, covered, or concealed until it has been inspected, tested, and approved, except when procedure is modified by the referenced installation and testing standard.

7A.9.2 Field tests. Hydrostatic pressure for pressure test shall be 50 percent in excess of the maximum working pressure of the system, but shall be not less than 100 psi and shall be held for a minimum of one hour. Prior to the pressure test, that portion of the water line being treated shall be filled with water for a soaking period of not less than 24 hours. Hydrostatic pressure for leakage test for all systems shall be the maximum working pressure of the system, except as otherwise specified hereinafter. Leakage test may be performed at the same time and at the same test pressure as the pressure test. Pipe, joints, valves and fittings in the test section shall be examined. Equipment shall be tested in operation to demonstrate compliance with specification requirements. All control valves shall be fully opened and closed under water pressure. Appliances, water and equipment for testing shall be furnished by the Contractor at his own expense, and the systems tested until proved satisfactory. The Contractor shall submit a certificate similar to that specified in NFPA 24 with a request for a formal inspection at least two working days prior to the date the inspection is to take place. At this inspection, any or all of the required tests shall be repeated as required.

7A.9.2.1 Testing of pipelines shall be in accordance with AWWA C 600, except as specified otherwise herein. The amount of leakage on lines with push-on or mechanical joints shall not exceed the amounts given in AWWA C600. No leakage will be allowed at flanged joints.

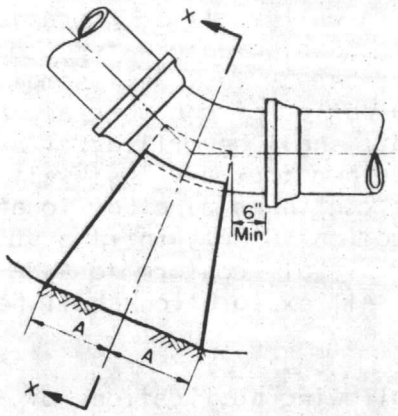

PLAN
BENDS

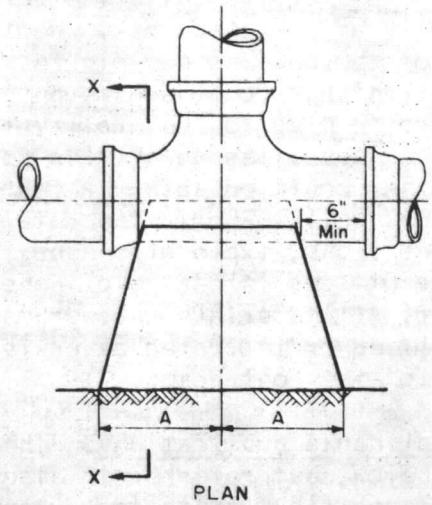

PLAN
TEES

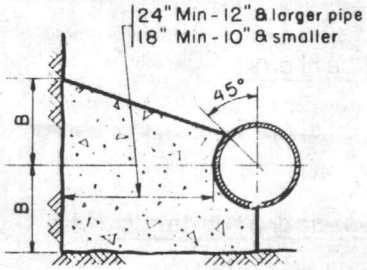

SECTION X-X
BENDS & TEES

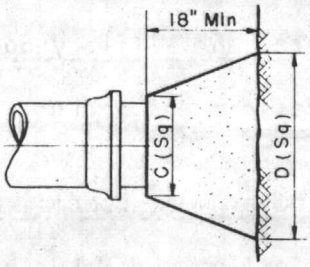

PLAN & ELEVATION
PLUGS

SIZE	1/4 BENDS		1/8 BENDS		1/16 BENDS		TEES		PLUGS	
	A	B	A	B	A	B	A	B	C	D
6"	16"	10"	9"	10"	6"	8"	10"	12"	10"	21"
8"	22"	13"	12"	13"	8"	10"	13"	16"	12"	29"
10"	26"	17"	14"	17"	10"	13"	16"	20"	14"	36"
12"	29"	21"	16"	21"	11"	16"	18"	24"	16"	41"
14"	35"	24"	19"	24"	12"	20"	22"	27"	18"	48"
16"	38"	27"	21"	27"	12"	24"	24"	30"	20"	54"

NOTE: Based on 100 p.s.i. static pressure plus A.W.W.A. water hammer
All bearing surfaces to be carried to undisturbed ground

STANDARD THRUST BLOCKS FOR WATER MAINS

LANTDIV PLATE WD-1

END OF SECTION 7A

SECTION 7B Well Construction

7B.1 General requirements. The work includes the provisions of two gravel wall wells and related work. Wells shall have a minimum average capacity each of 150 gallons per minute. Each well shall be guaranteed by the Contractor to furnish a continuous supply of clear potable water, completely free of sand, conforming to the quality indicated by test well sampling, of not less than the specified quantities for a period of one year after acceptance of the completed work. A test well shall be drilled at each location of a new well. Should the data obtained from any test well indicate unfavorable conditions, exploration shall be continued at other locations approved by the Officer in Charge of Construction (OICC), until a suitable site is located. All materials and workmanship shall conform to AWWA A100, except as specified or indicated otherwise. All exploration shall be at the expense of the Contractor.

7B.2 Applicable publications. The following publications of the issues listed below, but referred to elsewhere by basic designation only, form a part of this specification to the extent indicated by the references thereto (where a number is suffixed to the specifications, it denotes the effective amendment to the specification).

(a) Federal and Military Specifications.

GG-G-76c(1) Gates, pressure and vacuum, dial indicating
SS-C-192g(3) Cement, Portland

(b) Non Government Specifications and Standards.

American Society for Testing and Materials (ASTM)

A53-71 Welded and seamless steel pipe
B88-71 Seamless copper water tube

American Waterworks Association AWWA)

A100-66 Deep Wells
C601-68 Disinfecting water mains

7B.3 Test Wells.

7B.3.1 The Contractor shall drill a test well at each site before construction of the permanent well is started. The test well shall be of sufficient size to obtain the necessary information required for the construction of the permanent well, but shall be not less than 6 inches. The location, size of well, and method of drilling must be approved before work is started. Test wells shall be not less than 150 feet deep.

7B.3.2 The Contractor shall keep an accurate log and record of all material drilled through and the depths at which changes in formation occur.

7B.3.3 Samples of the type of material found in each stratume shall be taken by the Contractor and preserved in approved containers furnished by the Contractor. Samples shall be appropriately labeled to show depth below ground surface and thickness of the stratum from which the samples are obtained.

7B.3.4 All water bearing strata must be described in detail as to whether material is loose or compact, its color, and if gravel, whether it is water worn or angular. The presence of clay must be noted.

7B.3.5 Contractor shall collect and have analysed samples of water from all water bearing strata encountered so as to accurately show the quality of water from each stratum. These preliminary tests shall show in P.P.M. the phenolphthalein alkalinity, total alkalinity, calcium, magnesium, chlorides, carbon dioxide, carbonates, sulfides, bicarbonates, iron, magnenese, hardness, total dissolved solids, tubidity, odor, and Ph.

7B.3.6 Complete electric log indicating resistivity and potential of all formations shall be furnished.

7B.3.7 Recommendations and Data submittal. The Contractor shall make recommendations for a permanent well and shall submit all data obtained at each site. The recommendations shall include the appropriate depth, details of construction, length and location of screens, screen openings and an estimation of the quanity of water that can be obtained from each water bearing stratum and from the completed well.

7B.3.8 Permanent well shall not be drilled until all data submitted for test well has been analysed and approved by the OICC.

7B.3.9 Test wells may be incorporated in the finished construction. Wells not used in finished construction shall be sealed as recommended in AWWA A-100.

7B.4 Permanent gravel wall wells.

7B.4.1 Pit casing. A hole not less than 24 inches in diameter shall be drilled to a minimum depth of 40 feet and to additional depth as necessary to terminate in an impervious stratum. A pit or surface casing 18 inches in diameter shall be installed concentrically in the hole and extending to 6 inches from the bottom. The pit casing shall be grouted in by pumping a cement slurry around the casing in such manner as to completely fill the hole and seal the casing to the wall of the formation drilled. Before pumping cement, clear water shall be pumped to the bottom of the casing to clear the hole of slush and cuttings. The cement seal formed in the bottom of the casing shall be cut through for further drilling in a manner that will not disturb the seal.

7B.4.2 Drilling. The drilling hole shall be a minimum of 17 inches in diameter and shall extend to the bottom of the lowest water bearing formation samples and the electric log. Each water bearing formation to be developed shall be under-reamed to at least 22 inches in diameter and held open for placing of gravel after screen and inner casing has been set. All drilling shall be accomplished with proper drilling clay of the bentonite type having

having a weight not to exceed 9 pounds per gallon at 15 centipoise viscosity. The ph value of the drilling mud shall be maintained at 7.6 or more at all times. The drilling clay shall be of a type readily thinned with commercial mud thinners for easy removal from the walls of the wells and introduced gravel. Sufficient screens shall be provided at each formation to be developed to secure therefrom all available flow. The depth of the well and quantity of screen used shall be adequate to produce the specified guaranteed capacity. Casing and screens, as specified, shall be installed concentrically in the hole and completely enveloped by gravel and permanently sealed at the lower end. The gravel shall be pumped into place under pressure, through a temporary pipe line, extending to the bottom of the screen. The pipe line shall be raised as the gravel fills the hole, so that the lower end of the pipe is always 2 to 60 feet below the gravel level. The gravel shall entirely fill the space around the screens and casing and equipment and methods of placing the gravel shall be approved as adequate to accomplish the result before placement is begun. When the placement of gravel is completed, the drilling clay shall be thinned and the well pumped free of all sand, mud, drillings, and other foreign matter. The gravel shall extend from the bottom to the ground level.

7B.5 Tests. Upon completion of each permanent well, the Contractor shall provide a temporary pump in each well for measuring the flow and drawdown. The temporary pump shall have a capacity of not less than 300 gallons per minute. After determining the static water level in the well, the pumping shall begin at a rate of approximately 50 gallons per minute and the drawdown checked at 1 minute intervals for 15 minutes and then at 15 minute intervals until it stabilizes, after which pumping shall be continued at that rate for 2 hours and the water level checked at 30 minute intervals. The pumping rate shall then be increased in uniform increments not exceeding 50 gallons per minute and the described procedure repeated at each increment of increased rate until the capacity of the well is determined. The capacity of the well shall be the flow obtained at a drawdown level 10 feet above the top of the uppermost screen. After the safe maximum yield of the well has been determined, continuous 24 hour pumping test shall be conducted at that rate and the drawdown checked at hourly intervals. The Contractor shall provide necessary pipe and ditches to take the water away from each well site. A complete written log of the test showing static water level, pumping rate and drawdown at the specified intervals shall be furnished. At the end of the 24 hour test, water samples shall be taken and tested by an approved testing laboratory for complete and bacteriological analysis. Additional samples shall be furnished in suitable containers.

7B.6 Materials.

7B.6.1 Casings. The outer pit casing 18 inch nominal diameter shall be black steel pipe, 0.438 inch wall thickness in accordance with ASTM A53. All other casings shall be seamless zinc coated steel pipe in accordance with ASTM A53 or A120, shall be not less than 8 inches diameter, and not less than 0.322 inch wall thickness. All joints shall be either threaded or coupled, with heavy recessed type couplings in which the ends of the pipe shall butt, or they may be field welded.

7B.6.2 Well screen. Shall have an outside diameter of not less than 8 inches and be of not less than 6 gauge material, and shall be of corrosion resistant (stainless) steel AISI type 304, with continuous slot openings of proper size and design to hold back and support the gravel used in the gravel envelope around the screens. Joints shall be made with heavy butt type couplings of the same materials, or by welding. Length shall be as required to provide the amount of water specified. Water velocity thru the slots shall not exceed 0.20 feet per second.

7B.6.3 All gravel used for gravel envelope around screens shall be round, hard, water worn, gravel of proper gradation that will allow free flow of water in the well and positively prevent the infiltration of sand. Gravel shall be based on the formation sieve analysis and sieve analysis shall also be furnished to the OICC. It shall be of siliceous material, reasonably smooth and round, and shall be free of mat or elongated pieces of well as of dirt, vegetable matter, or other foreign material. The gravel shall be thoroughly sterilized with hypochlorite before being placed.

7B.6.4 Cement grout for sealing the space between the casing and the drilled hole, shall be composed of portland cement, type I, conforming to SS-C-192, and water. The mixed grout shall weigh not less than 14 pounds per gallon.

7B.7 Air lines. Each well shall be provided with an air line complete with altitude gage and shrader air valve. The air line shall be 1/2 inch copper tubing conforming to ASTM B88, Type K, with solder joint wrought copper fittings. Air lines shall extend a minimum of 10 feet below the drawdown level. Each air line shall have a shrader air valve and altitude gauge. Gauges shall conform to GG-G-76, Class i, Type A, Type I with a 4½ inch dial, brass or aluminum case, bronze, tube. Scale shall be 0 to 100 feet.

7B.8 Disinfecting. The well shall be disinfected by adding chlorine or hypochlorine solution in accordance with AWWA A100 and C601. Sufficient chlorine or solution to give the water a chlorine content of 50 P.P.M. shall be fed into the water continuously during the gravel placing operation. After disinfecting the solution shall be flush from the well with clean water until residual chlorine content is not greater than 0.2 ppm or not greater than the residual chlorine content of the flushing water.

7B.9 Production Guarantee. It is the intent of this section of the specifications to provide two additional wells to serve the existing treatment plant and the two new wells to have a total capacity of 300 gpm. Each new well is specified to have a capacity of 150 gpm. Two wells having an average capacity of 150 gpm each will be acceptable, provided neither well is rated higher than 200 gpm.

7B.10 Quality control.

7B.10.1 Materials tests and test reports. The testing requirements for materials incorporated in referenced documents will be waived provided the manufacturer submits notarized certificates stating that previously manufactured

materials have been tested by recognized laboratories, that such materials meet testing requirements specified, and that the materials furnished for this project are of the same type, quality, manufacturer and make as that tested.

7B.10.2 Field tests. All tests to determine conformance with the specified requirements shall be performed by the Contractor.

END OF SECTION 7B

DIVISION 8 ELECTRICAL

SECTION 8A INTERIOR ELECTRICAL
8B EXTERIOR ELECTRICAL

Section 8A Interior Electrical

8A.1 General requirements. The work includes modifications to existing interior electrical systems and the provision of new interior electrical systems. Each system shall be complete and ready for operation. All raceways shall be inspected and approved before being buried, covered or concealed. Equipment, materials, installation and workmanship shall be in accordance with National Electrical Code (NEC), except as specified or indicated otherwise. Material arriving on job site shall be stored in such a manner as to keep material free of rust and dirt and so as to keep material properly aligned and true to shape.

All electrical equipment and materials shall be new and shall conform to the applicable Underwriter's Laboratories, Inc. (U.L.) unless specified otherwise. Materials damaged during shipment, storage, installation or test shall be replaced or repaired in a manner meeting with the approval of the Officer in Charge of Construction (OICC).

The contract drawings indicate the extent and general arrangement of equipment, fixtures, and conduit and wiring systems. If any departures are deemed necessary by the Contractor, details of such departures and the reasons therefor shall be submitted as soon as practicable and within 30 days after award of the contract to the Officer in Charge of Construction (OICC) for approval. No such departures shall be made without prior written approval of the OICC. The Contractor shall be responsible for providing properly sized circuit breakers to serve equipment and motors furnished which differ from that specified or indicated. This shall be further understood to include branch circuit wiring, conduit, disconnect switches, etc., in accordance with the appropriate codes and specifications. The cost of providing this increased electrical service and related work shall be included under the applicable sections under which the equipment and motors are being furnished.

8A.1.1 Equipment shall be in accordance with standards of the National Electrical Manufacturers Association (NEMA).

8A.1.2 Standard products. Unless otherwise indicated, the materials to be provided under this specification shall be standard products of manufacturers regularly engaged in the production of such equipment and shall be the manufacturer's latest design. All items of the same type or ratings shall be identical. This shall be further understood to include standard products with accessories indicated.

8A.1.3 Acceptable standards as applicable, are referenced to throughout this section in abbreviated form and are listed hereunder as follows:

(a) Federal Specifications (FS):

W-C-375A & Am1 Circuit Breaker, Molded Case, Branch Circuit and Service

W-S-865C & Int. Am 2 Switch, Box, (enclosed), Surface Mounted

(b) National Electrical Manufacturers Association (NEMA) STD's

(c) National Fire Protection Association (NFPA) Publications:

70-1975 National Electrical Code (NEC)

(d) Underwriters Laboratories, Inc. (UL) Standards

(e) American National Standards Institute (ANSI)

(f) Institute of Electrical and Electronic Engineers (IEEE)

(g) LANTDIV Plates.

16-V Light Fixtures
Dated 8-74)

8A.2 Electrical Service. All arrangement shall be as indicated with proper extensions, terminations, etc. Final connections to the power distribution system shall be made by the Contractor as directed by the OICC. Building service: 120/240 volt, 3-phase, 4-wire, 60 Hz connected alternating current.

8A.3 Conduit Materials.

(a) Rigid steel conduit shall be low carbon, hot dipped galvanized or sherardized, inside and outside, including screwed joints. Fittings shall be cast alloy, galvanized.

(b) Flexible conduit shall be galvanized, single strip, with a copper strip interwoven. In areas subject to abnormal moisture, or where called for on the drawings, flexible conduit shall have plastic covering. Fittings shall be standard with ground connector. Watertight connectors shall be used with plastic covered conduit.

(c) Plastic jacketed rigid steel conduit shall be the rigid conduit specified hereinbefore with a poly-chloride jacket bonded to the conduit to a minimum thickness of 0.035 inches.

8A.3.1 Conduit installation.

(a) General. Conduit shall be installed exposed on side walls and ceilings. For floor mounted equipment, conduit may be run overhead

and dropped down, where underfloor installation is not practicable. Conduits entering or leaving outlet, junction, or pull boxes, and cabinets, shall have insulated bushings. Flexible conduit shall be used for connections to motors and other equipment subject to vibration and for connections to recessed or semi-recessed fixtures. Groups of conduit shall be uniformly spaced, where straight and at turns. Bends and offsets, where unavoidable, shall be made with hickey or bending machine. Conduit shall be cut with a hacksaw or an approved conduit cutting machine and reamed after threading to remove all burrs. Securely fasten conduit to outlets, junction and pull boxes to effect firm electrical contact. Join conduit with approved couplings. Expansion fittings shall be installed in conduit where it passes through structural expansion joints. Electrical metallic tubing shall not be used in floor slabs, outside walls below grade, or exposed unless a minimum of 6 feet above floor. Joints in plastic jacketed conduit shall be made with plastic jacketed nipples or fittings. Any breaks or nicks in the plastic jacket on the fittings and conduits shall be repaired with a material of the same composition as the jacket on the conduit. All conduits buried in the earth outside of the building shall have a minimum of 24 inches of cover above the top of the conduit or conduit encasement, if the conduit is encased in concrete.

(b) Underfloor and Underground conduits installed in concrete shall not cross each other. In or under concrete slabs and in earth, conduit joints shall be made watertight and,in earth, the conduit shall be painted 2 coats with heavy asphaltum paint. When buried in cinders or cinder-concrete, meal conduit shall be encased in concrete composed of 1 part Portland Cement, 2 parts sand and 4 parts coarse aggregate. Encasement shall be 3 inches thick all around the conduit. Other underground conduit, where indicated on the drawings, shall be encased in concrete a minimum of 3 inches thick unless shown otherwise. Concrete encasement shall be reinforced where called for on the drawings. Joints in conduit shall be staggered so as not to occur side by side.

(c) Conduit Support. Exposed runs of conduit shall be supported every 8 feet and shall be parallel or perpendicular to walls, structural members or intersections of vertical planes and ceilings with right angle turns consisting of fittings or symmetrical bends. Conduits shall be supported within 1 foot of all changes in direction. Supports shall be approved wall brackets, trapeze, strap hangers, or pipe straps secured to hollow masonry with toggle bolts; to brick and concrete with expansion bolts; to metal surfaces with machine screws; and to wood with wood screws. Explosive drive equipment may be used to make connections where the use of this equipment complies with safety regulations. Wooden plugs inserted in masonry, and the use of nails as fastenings media, are prohibited.

8A.4 Wire, Cable and Wiring.

(a) Underground Secondary Circuits. The underground secondary conductors shall be single conductors, alloy coated strand or standard type USE, rated not less than 600 volts. Cable shall be suitable for direct

burial or conduit installation and shall be free from splices from one junction box to another.

(b) Conductors for main feeder and riser circuits out of the main switchboard shall be heat and moisture resistant, flame retarding, thermoplastic insulated type THW, rated for 600 volts. Circuit wire and cable inside the building shall be moisture resistant, flame retarding, thermoplastic insulated type THW, rated for 600 volts. Conductors for connections from outlet box, near fixture, to recessed and semi-recess lighting fixtures shall be No. 14AF stranded wire minimum. Thermoplastic insulated nylon jacketed type (THWN)(THHN) rated 600 volts, shall be used where called for on the drawings, or in lieu of THW, at the Contractor's option.

(c) Conductor sizes shown on the drawings are based on copper. Aluminum conductors No. 6 and larger may be used in lieu of copper, provided the conductors are large enough to have a current carrying capacity equal to the copper conductors called for. Larger size conduits shall be used when required as the result of using aluminum conductors.

(d) Color Coding. All wire shall be color coded and marked. A different color shall be used for each phase and the same color shall be used for the same phase throughout for all three phase and feeder circuits.

(e) Wire sizes shall be as indicated on the drawings and in general:

(1) No wire shall be smaller than No. 12.

(2) Wire 8 A.w.g. and larger shall be stranded.

(3) The minimum size branch circuit shall be 20 amperes.

(f) Wiring installation. All wiring shall be in conduit. Conductors shall be continuous from outlet to outlet. Splices shall be made in outlet or junction boxes and shall be mechanically and electrically secure, using proper thickness of rubber and friction tape, or, at the contractor's option, vinyl plastic tape. Connections with wirenut type connectors or approved pressure connectors will be permitted for wires No. 10 and smaller. Mechanical connectors of every kind shall be taped. Flashover or insulation value of joints shall be at least 100% in excess of wire insulation. If aluminum conductors are used, the Contractor shall use particular care in making up joints and terminations. Surface oxides shall be removed by cleaning with a wire brush or emery cloth. Joint compound shall be used for connecting aluminum to aluminum. When connecting aluminum to copper, connectors specifically designed for this purpose shall be used:

(g) Wiring - General. Suitable equipment shall be used to pull conductors through conduit, exercising due care to avoid damage to insulation. Wires shall not be pulled through conduits before the conduit system is

complete and has been carefully freed from obstruction of any kind. Soapstone or an approved compound may be employed to facilitate pulling, wires. Where two or more circuits are housed in one conduit, a common neutral may be used if sized in compliance with NEC.

8A.5 Equipment connections. All wiring for the connection of motors and control equipment as indicated on the electrical drawings shall be furnished and installed under this section of the specifications. Except as otherwise specifically noted or specified, automatic control wiring, signaling, and protective devices are not included in this section of the specifications but shall be furnished and installed under other sections of the specifications. Control wiring not shown on the electrical drawings shall be furnished under other sections of the specifications.

8A.6 Outlet Boxes.

(a) General. Outlet boxes shall be sheet steel, zinc coated or cadmium plated, except for exposed work. Boxes for exposed work shall be cast steel or steel alloy, complete with appropriate covers.

(b) Sizing. Boxes shall be sized as follows:

(1) Switch and receptacle outlet boxes, not less than 4 inches square and 1½ inches deep.

(2) Fixture outlets in ceilings; 4 inches octagonal, minimum. Where required to accommodate larger conduit or a larger number of wires; 4-11/16 inches by 2-1/8 inches deep.

(3) One piece gang boxes for use where two or more switches are located side by side; 2-1/8 inches deep.

(4) In concrete, boxes shall be 4 inch concrete type.

(5) Where larger size boxes are required, or called for, they shall be similar in all other respects to the types above specified.

(c) Lighting fixture outlet boxes, where fixtures are to be mounted on the box, shall have suitable studs and supports for carrying the weight of the fixture. Box depth shall be increased, as required for additional wires and conduit.

(d) Grounding. All outlet boxes shall be equipped with grounding screws for bonding to the green grounding conductor in the box.

8A.7 Pull and Junction Boxes.

(a) General. Pull and junction boxes shall be installed where indicated on the drawings or where required for changes in direction, at junction points or where needed to facilitate wire pulling.

(b) Box sizes shall be as indicated on drawings and/or in accordance with NEC.

(c) Material. Boxes shall be constructed of 12 gauge minimum hot rolled sheet steel and shall be hot dipped galvanized inside and outside to match the conduit. Boxes shall have removable covers.

(d) Finish and Type. Cast iron junction boxes shall be galvanized finish. Gaskets shall be used where required.

8A.8 Condulet Bodies.

(a) General. Condulets bodies shall be used on exposed conduit work for lighting and power outlets, convenience outlets, telephone or signal outlets, changes in direction of conduit runs and breaking around beams.

(b) Covers and gaskets shall be furnished with the condulets, which shall be of a design suitable for the purpose intended. In damp areas, and outside, condulets shall be made watertight.

(c) Type. Condulets shall be cast ferrous alloy and galvanized. Epoxy coated fittings shall be used with coated conduit and where called for on the drawings.

(d) Grounding. All outlet fittings shall be equipped with grounding screws for handling to green grounding conductor in the outlet.

8A.9 Expansion joint fittings. Where conduits pass through building expansion joints, approved waterproof telescopic type expansion fittings shall be used. Fittings shall be watertight and permit a movement up to 4 inches and shall be equipped with approved bonding jumpers around or through each fitting.

8A.10 Grounding. Except where specifically indicated otherwise, all exposed non-current-carrying metallic parts of electrical equipment, raceway systems and neutral conductor of the wiring system shall be grounded. The neutral ground connection shall be made at the main service equipment and shall be extended to the point of entrance of the metallic water service. Connection to the water pipe shall be made by a suitable ground clamp or lug connection to a plugged tee. If flanged pipes are encountered, connection shall be made with the lug bolted to the street side of the flange connection. If there is no metallic water service to the building, ground connection shall be made to driven ground rods on the exterior of the building. Where ground fault protection is employed, care shall be taken so that the connection of ground and neutral does not interfere with the correct operation of the fault protection.

8A.10.1 Equipment grounds. The Contractor shall provide a green colored equipment grounding conductor which shall be separate from the electrical system neutral conductor. It shall be solid and continuous from a connection at the earth to all distribution panelboards. Equipment ground conductors shall be provided in all branch circuits serving convenience outlets, receptacles, portable and permanently installed electrical appliances, equipment, apparatus and other miscellaneous metal enclosing bodies (including light switch boxes) normally within contact of personnel. Ground connections at panelboards, outlets, equipment and apparatus shall be made in an approved and permanent manner. Resistance to ground shall not exceed 25 ohms under

normally dry conditions. A main telephone service equipment ground shall be provided. Each telephone ground shall consist of a separate #6 AWG ground wire in conduit between the equipment and a readily accessible grounding connection. The equipment end of the ground wire shall consist of a coiled length at least twice as long as the terminal cabinet or backboard height.

8A.11 Cover and Device Plates.

(a) General. An appropriate device plate shall be provided for each pull box, switch, receptacle, or other outlet. Plates on unfinished walls or on fittings shall be galvanized steel. Device plates shall be of the one-piece type and of suitable shape for devices to be covered. The use of sectional device plates shall not be permitted unless specifically called for. Cast metal covers shall be used where applicable.

8A.12 Switches.

(a) General. Switches shall be of totally enclosed tumbler type, enclosures shall be of phenolic composition.

(b) Installation. Switches shall be installed singly or in gangs, as shown on the drawings and shall be located approximately 4 feet 6 inches above floor levels and be connected so as to afford control over the indicated outlets.

(c) Types. Unless otherwise indicated, switches shall be quiet, flush type, 20 amp. 125/277 volts, "AC rating".

8A.13 Receptacles.

(a) Duplex 120 volt convenience receptacles shall be grounding type and be rated at 20 amperes at 125 volts. Bases shall be brown phenolic composition and terminals shall be mounted on the sides with two screws per terminal.

(b) Mounting. Receptacles shall be mounted 18 inches above finished floor unless indicated otherwise.

8A.14 Safety Switches.

(a) Safety switches shall be Type "N" normal duty fusible, or non-fusible, single throw, or double throw, quick make quick break, 2, 3, or 4 pole, 250 or 600 volt as required, NEMA Type I enclosed unless otherwise indicated. The switches shall be fused or non-fused as indicated on the drawings. Switch shall have no cover interlock.

(b) Weatherproof NEMA Class 4 or Class 7 safety switches shall be installed at all outside locations or where indicated on the drawings. NEMA 3R enclosures may be used where indicated.

(c) Fused safety switches shall be complete with appropriate sized fuses for circuits controlled.

8A.15 Fuses. The Contractor shall provide a complete set of fuses for all switches, panels, bus plugs, switchgear, and control centers as required. Time current tripping characteristics of fuse serving motors or connected in series with circuit breakers shall be coordinated for the proper operation. Fuses shall have a boltage rating not less than the circuit voltage.

(a) Cartridge fuses, dual-element time lag type, shall be nonrewable with an interrupting rating, not less than 25,000 amperes. At 500 percent current, time lag fuses shall not blow in less than 10 seconds. Dual element time lag fuses shall be used for circuit rated in excess of 30 amperes or 125 volts, except where current limiting fuses are indicated.

8A.16 Motors and controllers shall conform to the latest applicable standards of the NEMA for Type, Class and size as specifically applied. Motors shall be suitable for across the line starting. Motors above 1/3 horsepower shall be arranged for operation on 240 volt, 3 phase, 3 wire, 60 Hertz current as indicated. Each type of controller shall contain thermal running overload protection and manual reset means. Overload elements shall be provided in each phase. Provide hand-off-automatic switch in cover on each magnetic starter furnished under the division entitled "Equipment" shall be connected under this section.

8A.16.1 Motor controllers. Motor controllers or starters and controls shall be provided under this section and shall be mounted and wired to operate as indicated. Each motor lead shall have overload protection. Combination starters with fusible disconnect switch in the same enclosure shall be furnished where indicated. Starters for motors under automatic control shall have built in "hand off auto" selector switch. The approximate size of each motor is shown on the drawings. Check size and characteristics of all motors to insure that correctly sized starters and overload heaters for the motors installed are provided. All starters and controls shall be NEMA 1 enclosed where mounted inside a building. Where control voltages are different from motor voltages, a control voltage transformer shall be furnished in and as part of the starter.

8A.16.2 Motors shall be of sufficient size for the duty to be performed and shall not exceed their full load nameplate current rating when driven equipment is operated at specified capacity under the most severe conditions likely to be encountered. All motors to be designed to operate at full capacity with a voltage variation of plus or minus 10 percent of the motor voltage rating.

8A.17 Panelboards. Lighting and applicance branch circuit panel boards shall be type 1, class 1, factory assembled automatic circuit breaker type. Distribution, power or feeder panelboards shall be circuit breaker equipped, type 1. Circuit breakers shall conform to W-C-375 unless otherwise indicated and except that circuit breakers designated as class 1a and 1b shall have an interrupting capability of 10,000 amperes symmetrical. Multipole circuit

breakers shall be of the common trip type having a single operating handle. Plug in type circuit breakers are not acceptable. Wiring gutters on panelboards having through feeders shall be 5 inch minimum. Panelboards shall not exceed 78 inches in height and shall be so mounted that the height of the top operating handle will not exceed 6 feet 6 inches from the floor.

8A.17.1 All multi-pole breakers shall be designed so that an overload in one pole automatically causes all poles to open. Any three adjacent breaker poles shall be connected to Phases A, B, and C respectively and that same relationship of phase sequence shall be maintained.

8A.17.2 Complete panelboard assembly shall be so designed that any individual breaker can be removed without disturbing adjacent units or without loosening or removing supplemental insulation supplied as a means of obtaining clearances and other requirements of the Underwriter's Laboratories. Bus bars shall be securely fastened to bases and shall not depend upon breakers for support. All main buses and back pans shall be so designed that branch circuits may be changed without additional machining, drilling or tapping.

8A.17.3 Panelboard shall be made of cold rolled sheet steel in accordance with gages as required by the Underwriter's Laboratories. All trim shall have door equipped with flush type combination lock and catch, three milled type keys being supplied with each lock. Each lock shall be keyed same as lock on other panelboards.

8A.17.4 Before manufacturing, drawings shall be submitted showing dimensions of panelboard cabinets, gutter space, gage and trim, main bus and terminal ratings, manufacturer's name and type of breakers, and details of construction of the panelboards to determine compliance with the specifications.

8A.17.5 Neutral and ground buses. Provide an insulated neutral bus for each panel for connection of both feeder and branch circuit neutral wires. A separate ground bus, bonded to the steel cabinet, shall be provided for each panel for connection of all ground wires and shall be marked with a green stripe along the front of the bus.

8A.17.6 Provide panel with typewritten index card and transparent cover in frame on inside of door indicating circuit control.

8A.18 Lighting fixtures shall be as shown on the drawings and on LANTDIV plates No. 16-V and shall be furnished complete with lamps of the numbers, type and wattages shown. Lighting, fixtures shall not be supported from suspended ceilings, but shall be supported from structural members above.

(a) Mounting. The exact mounting shall be approved on the job before installation is commenced, after coordinating with the type, style and pattern of the ceiling, being installed. Fixtures shall not be supported from ceiling tees but from structural ceiling.

8A.19 Wireway.

(a) General. Provide where indicated on the drawings or required, rigid steel wiring troughs. The trough, square in shape, constructed of steel, totally enclosed with cover fastened with screws, shall be sized as indicated.

(b) Accessories. The wireway shall be complete with all necessary accessories and fittings to effect a neat installation.

8A.20 Surface wall mounted electric heaters. Surface wall mounted electric heaters shall be rated 1Ø, 240V, 1.5, Kw as shown on contract drawings. The unit shall be constructed for surface mounting. The heating element shall be of the totally enclosed, finned, type, with nickel chromium resistance element encapsulated in a metal tube insulated in magnesium oxide. Air flow through the unit shall be downward across the heating element and out through the lower half of the unit. Air flow shall be provided by a blade type fan, controlled by a delayed action fan switch which shall not start the fan until the heating element has warmed up enough to produce warm air out of the unit and shall stop the fan after the heating element has cooled on cutoff. The heating element shall be controlled by a line voltage, concealed, tamperproof, thermostat, integrally mounted, with a temperature range of from 35 degrees to 40 degrees Fahrenheit. The heating element shall also be provided with a thermal limit switch of the automatic resetting type which shall disconnect the heating element from its power source should the temperature of the element rise above pre-determined safe level. The power supply to the unit shall be brought in through an integral control box containing a non-thermal magnetic circuit breaker. Access to the breaker and control box shall be through a locked door on the box in the face of the unit.

8A.21 Supporting material. The Contractor shall provide structural supporting units where required to support conduits, outlet boxes, lighting fixtures and other electrical equipment. The system shall be complete with hangers, connectors, bolts,clamps, and necessary accessories to make a complete installation. Structural angles, channels, and beams shall be installed where specifically called for on the drawings.

8A.22 Miscellaneous steel. Provide all miscellaneous items of steel required for installation of work under this Division.

8A.23 Cutting and patching. All cutting, patching, chasing and repairing shall be done in accordance with the applicable requirements of other Divisions of these specifications covering the various work or trades involved.

8A.24 Quality Control.

8A.24.1 Submittals. Manufacturers data, shop drawings, certifications, samples, Operations and Maintenance Manuals and Parts lists shall be submitted to the Officer in Charge of Construction (OICC) as indicated below in following quantities:

(a) Manufacturers data and shop drawings approved by OICC 4 copies for OICC retention plus number contractor desired to be returned.

8A.24.1.1 Materials and equipment approved by the Officer in Charge of Construction (OICC). As soon as practical after notice to proceed and before commencing installation the contractor shall submit to the OICC contractor manufacturers data for the following materials and equipment:

Motor starters	Wire and Cable	Receptacles
Distribution panels	Lighting Fixtures	Electric Heaters
Conduit	Switches	

All the data for the above materials and equipment shall be submitted at one time, no consideration will be given to partial submittals. Approval of materials and equipment shall be based on manufacturers published ratings. In the event that the materials or equipment or both are not available, the contractor shall submit a proposed substitute for Government approval; the submittal shall include the following information:

(a) Specific identification of the proposed substitute and justification for the necessity of the substitution.

(b) Complete data on the proposed substitution sufficient to determine, suitability and quality of the substitution. The Contractor shall also certify that all changes caused by the proposed substitution will be the responsibility of the Contractor and at no additional cost to the Government.

(c) Proposed change, if any, in the contract price or time or both.

8A.24.1.2 Shop drawings approved by the OICC. As soon as practical after notice to proceed and before commencing installation the contractor shall submit to the OICC shop drawings for the following items:

Panelboard Motor starters
Lighting fixtures
Electric Heaters

8A.24.1.3 Manufacturers Certification of compliance with specifications requirements shall be reviewed by the Contractor and submitted to the OICC prior to request for payment or installation of the following items:

Conduit Receptacles
Wire and Cable
Switches

8A.25 Tests.

8A.25.1 Field Tests. The contractor shall provide all labor, equipment and incidentals required for testing, except that the Government will provide electric power required for the tests. All defective material and workmanship disclosed shall be corrected by the contractor at no cost to the Government. The contractor shall show by demonstration in service that all circuits and devices are in good operating condition. Tests shall be such that each item of control equipment will function not less than five times.

(a) Insulation resistance test for systems 600 volts and less. After all wiring is completed and connected ready for operation, but prior to placing systems in service and before any branch circuit breakers are closed, insulation resistance tests shall be made in all feeder and subfeeder circuits. The insulation resistance between conductors and between each conductor and ground shall be measured. Measurement shall be made with an instrument capable of making measurements at an applied potential of 500 volts. Readings shall be taken after the voltage has been applied for a minimum of one minute. The minimum insulation resistance for circuits of No. 12 AWG conductors shall be 1,000,000 ohms. For circuits of No. 10 AWG or larger conductors, a resistance based on the allowable ampacity of the conductor shall be as follows:

25 through 50 amperes	250,000 ohms
51 through 100 amperes	100,000 ohms
101 through 200 amperes	50,000 ohms
201 through 400 amperes	25,000 ohms
401 through 800 amperes	12,000 ohms
Over 800 amperes	5,000 ohms

(b) Grounding systems shall be tested to assure continuity and compliance with the requirements that ground resistance not exceed the values hereinbefore specified. Ground resistance measurements of each ground rod shall be taken and certified by the Contractor. Upon completion of the project, the Contractor shall submit to the OICC the measured ground resistance of each ground rod and grounding system, indicating the location of the rod and grounding system, as well as the resistance and soil conditions at the time the measurements were made. Ground resistance measurements shall be made in normally dry weather, not less than 48 hours after rainfall, and with the ground water test isolated from other grounds. Ground resistance shall also be measured from each piece of equipment to the ground electrode.

8A.26 Field Inspection.

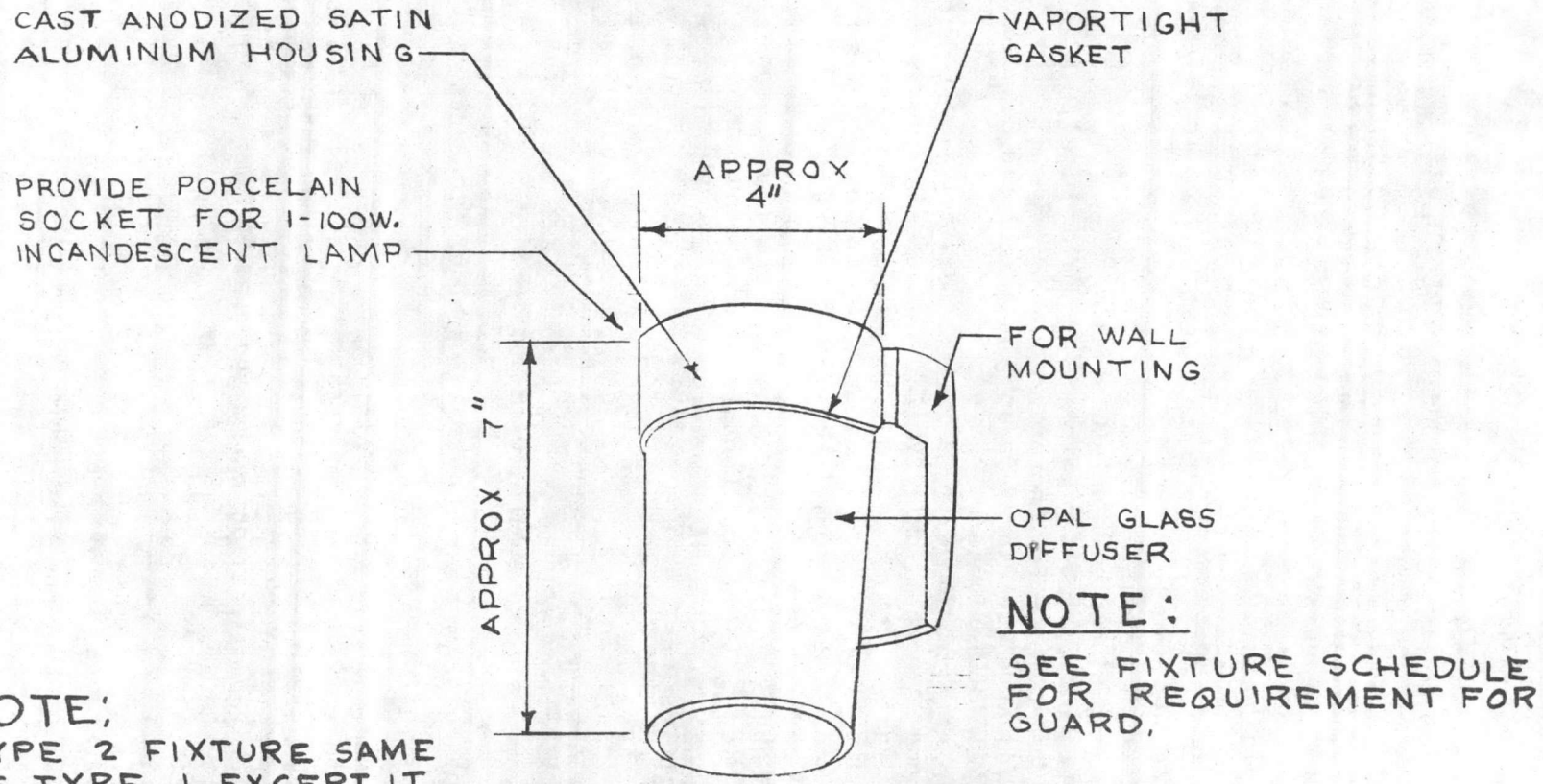

NOTE:
SEE FIXTURE SCHEDULE FOR REQUIREMENT FOR GUARD.

NOTE:
TYPE 2 FIXTURE SAME AS TYPE 1, EXCEPT IT SHALL BE FOR CLG. MT'G.

END OF SECTION 8A

TYPE-2
CLG. TYPE

TYPE-1

LANTDIV PLATE 16-V 8-74

SECTION 8B EXTERIOR ELECTRICAL

8B.1 Applicable Documents. The following specifications and standards of the issues listed below including the amendments, addenda, and errata designated, but referred to hereinafter by basic designation only, form a part of this specification to the extent required by the references thereto.

8B.1.1 Federal Specifications.

J-C-30A	Cable and Wire, Electrical (power, fixed installation).
J-C-145B(Int.1)	Cable, Power, Electrical and Wire, Electrical (weather resistant).
QQ-W-343D	Wire, Electrical (uninsulated).
W-C-586A(4)	Conduit Outlet and Entrance Cap, Electrical, Cast-Metal - For Shore Use.
W-F-406B(Int. 1)	Fittings for Cable, Power, Electrical and Conduit, Metal, Flexible.
W-F-408C(1)	Fitting for Conduit, Metal, Rigid, (thick-wall and thin-wall (EMT) type).
W-J-800C(3)	Junction Box, Extension, Junction Box, Cover, Junction Box (steel, cadmium, or zinc-coated).
TT-W-571i(Int.2)	Wood Preservation, Treating Practices.
WW-C-566B	Conduit, Metal, Flexible.
WW-C-581D(3)	Conduit, Metal, Rigid, and Coupling, Elbow, and Nipple, Electrical Conduit, Zinc Coated.

8B.1.2 Military Specifications.

MIL-I-1512F(2)	Insulation Tape, Electrical, Pressure Sensitive Adhesive and Pressure Sensitive Thermosetting Adhesive.
MIL-H-55053B	Hardware, Pole Line, with Supplement.

8B.1.3 U. S. Department of Commerce, National Bureau of Standards Handbooks.

H30-1948	National Electrical Safety Code.
81-1961	Safety Rules for the Installation and Maintenance of Electrical Supply and Communication Lines.

8B.1.4 Other Government Specifications and Standards.

*LANTDIV Pole Plates (dated 9-74)	Title
16-15	TTT
16-18	Guy
16-21	Conduit Riser

8B.1.5 Institute of Electrical and Electronic Engineers Standard (IEEE)

48	Potheads (Including Test Code).

8B.1.6 National Fire Protection Association (NFPA)

70-1975 National Electrical Code.

8B.1.7 Underwriters' Laboratories, Inc., Standards: (Current Edition)

UL 514 Outlet Boxes and Fittings.

8B.1.8 American National Standards Institute Standards (ANSI)

05.1-1972 Specification and Dimensions for Wood Poles.

8B.1.9 American Wood Preserver's Association (AWPA)

Book of Standards (Current Edition)

8B.2. **Quality Control.** Approvals, except those required for field installations, field applications, and field tests shall be obtained before delivery of material or equipment to the project site.

8B.3 Submittals.

8B.3.1 Information required of the Contractor. Within 30 days after the award of the contract, furnish the names and addresses of the manufacturers, together with catalog information or other identifying description to the Officer in Charge of Construction (OICC).

Contractor shall submit such information as may be required, including the following: poles, conduit wire and cable.

8B.3.2 Certificates of Conformance or Compliance. Before delivery of materials, notarized certificates, in (triplicate), attesting that materials and fabrication meet the requirements specified shall be approved by the Contractor's Quality Control Representative (CQCR) and submitted to the OICC for record purposes.

8B.4 Product Handling

Material arriving on job site shall be stored in such a manner as to keep material free of rust and dirt and so as to keep material properly aligned and true to shape. Rusty, dirty, or misaligned material shall be rejected. Electrical conduit shall be stored to provide protection from the weather and accidential damage. Plastic conduit shall be stored on even supports and in locations not subject to direct sun rays or excessive heat. Cables shall be sealed, stored and handled carefully to avoid damage to the outer covering or insulation and damage from moisture and weather. Adequate protection shall be required at all times for electrical equipment and accessories until installed and accepted.

8B.5 General Requirements

8B.5.1 Description of Service. The building service shall be Underground at Building M0244 and combination Underground-Overhead at Building M-627.

8B.5.1.1 Underground Service. Underground services into buildings shall extend in conduit from the weatherhead on the service and meter pole, or the loadside of the meter, to a point five feet outside the building structure where the conduit shall join that extending from the building structure covered and included in Section entitled, ELECTRICAL INTERIOR. Ends of the underground conduit shall be protected by threaded metal caps until connections are made.

8B.5.1.2 Overhead Service. Overhead service conductors into building shall terminate at the service entrance fittings or weatherhead outside the building. The installation and connection of service entrance equipment to the overhead service conductor is included in Section entitled, ELECTRICAL INTERIOR.

8B.5.1.3 Electrical Characteristics. Electrical service for this project will be 12,470 volts primary, three phase, 4 wire, 60 Hertz and three phase, 4 wire, 120/240 volts secondary.

8B.5.2 Service Interruptions. Where interruption of existing service is necessary, the Officer in Charge of Construction (OICC) shall be notified, in writing, at least 7 days in advance. The interruption shall not be made unless authorized. The outage shall be as short a duration as possible and will take place at a time that will least interfere with normal station activities. The government will not be responsible for premium time to perform the work scheduled during the outage.

8B.5.3 Standards. Electrical equipment and materials shall be new and shall conform to the applicable standards of the Underwriters' Laboratories (UL) and the National Electrical Manufacturers Association (NEMA), unless specified otherwise. Materials and equipment shall be standard products of manufacturers regularly engaged in the production of such equipment and shall be the manufacturer's latest design. All items of the same type or ratings shall be identical.

8B.5.4 Nameplates. Major components of equipment shall have manufacturer's name, address, catalog number, model, style, or type on a plate securely and conspicuously attached to each item of equipment. Nameplates for electrical apparatus shall conform to NEMA standards.

8B.5.5 Defective Equipment. Defective equipment or equipment damaged in the course of installation or test shall be replaced or repaired in a manner meeting with the approval of the Officer in Charge of Construction (OICC).

8B.5.6 Prevention of Corrosion. Metallic materials shall be protected against corrosion. Outdorr equipment shall be given a rust inhibiting treatment and standard finish by the manufacturer. Aluminum shall not be used in contact with the earth, and where connected to dissimilar metal shall be protected by approved fittings and treatment. Steel conduits installed underground shall be coated, plastic coating, or shall be wrapped with a single layer of a pressure sensitive plastic tape, half-lapped.

8B.6 Materials, Equipment and Assemblies.

8B.6.1 Electrical Tapes. Tapes used for electrical insulation and other purposes in wire and cable splices, terminations, repairs, and miscellaneous purposes shall be UL listed and shall be approved for the specific application.

8B.6.2 Metal Conduit. Unless indicated or specified otherwise, rigid metal conduit shall be used for all installations.

8B.6.2.1 Rigid Metal Conduit. Unless indicated or specified otherwise, rigid metal conduit shall be zinc-coated rigid steel. Rigid steel conduit shall conform to WW-C-581. Except where indicated or specified otherwise, rigid metal conduit installed underground shall be PVC factory-coated.

8B.6.2.2 Flexible Metal Conduit. Flexible conduit shall conform to WW-C-566.

8B.6.2.3 Fittings, Boxes, Covers and Outlets. Fittings and accessories for rigid metallic conduit, electrical cable, and flexible steel conduit shall conform to the following specifications, Fittings boxes, covers, and outlets shall be cast or malleable iron, and shall have threaded hubs. Standard for Outlet Boxes and Fittings, publication No. UL 514 and to the following specifications as applicable:

(1) Fittings for rigid steel conduit shall conform to W-F-408, Type I, and shall be cadmium or zinc-coated.

(2) Fittings for electrical cable and flexible metal conduit shall conform to W-F-406. Iron or steel fittings, except bar hangers, shall be cadmium or zinc-coated.

(3) Cast metal conduit outlets and entrance caps shall conform to W-C-586 and shall be cadmium or zinc-coated of ferrous metal.

(4) Junction boxes and covers shall conform to W-J-800.

8B.6.2.4 Exposed exterior conduits, fittings and boxes shall be polyvinyl chloride plastic coated galvanized rigid steel and shall conform to the following requirements:

(1) Prior to plastic coating, conduit, fittings and boxes shall conform to applicable Federal specifications and Underwriters' Laboratories Standards as specified herein.

(2) The zinc surface prior to plastic coating shall be conditioned with chromic acid or phosphate cleaning to provide an anchor for plastic coating.

(3) The exterior shall be coated with a heat polymerizing lacquer, .0005-inch thick, such as an epoxy-acrylic, prior to plastic coating.

(4) Thickness of jacket shall be between .035 inch and .045 inch. Jacket shall not cover the threaded end of the pipe.

(5) A plastic sleeve extending one pipe diameter of 2 inches (whichever is less) beyond all female threaded outlets shall be provided. The inside diameter of the sleeve shall be the same as the outside diameter of the I.P.S. pipe used with it. The wall thichkness of the sleeve shall be the same as the plastic jacket on the pipe.

(6) Bond between metal and plastic shall be equal to or greater than the tensile strength of the plastic coating.

(7) The dielectric strength of the polyvinyl chloride coating shall be checked with a minimum of 10,000 volts at time of manufacture. Any imperfections shall be repaired with a suitable solvent resin type vinyl chloride material compatible with the basic resin. Any flaw greater than 1/4 inch in the largest dimension shall cause the entire joint of the pipe to be rejected.

(8) Elbows in standard or special radius shall be coated as above. Separage couplings shall be furnished with sleeves described above on each end.

(9) The polyvinyl chloride compound shall have the following characteristics:

Hardness: 90 Shore A durometer (nominal)
Dielectric Strength (volts/mil @ 60 cycles) - 400 (Minimum)
Flammability - Self-extinguishing
Tensile Strength - 2000 psi (minimum)
Percent Elongation - 150 percent (minimum)
Aging - 1000 hours Atlas Weatherometer (minimum)

8B.6.3 Wires and Cables. Conductor sizes are specified by American Wire Gage (AWG). Unless indicated or specified otherwise, conductors No. 6 AWG and smaller shall be copper; conductors No. 4 AWG and larger shall be either copper or aluminum. Unless otherwise noted, the cable sizing indicated is for copper; if aliminum is used, it must have the equivalent copper ampacity rating. Should aluminum conductors be supplied, all conductors No. 4 AWG and larger shall be aluminum. Connectors and terminals shall be designed and approved for use with the associated conductor material, and shall provide a uniform compression over the entire contact surface.

8B.6.3.1 Underground cabling and equipment shall conform to the respective specifications and other requirements specified herein:

(1) All circuits 600 volts and less, including service entrances, shall be served by type USE cable, rated 600 volts, unless otherwise indicated or specified. Conductors size and number of conductors in each cable shall be as indicated. Conductors shall be copper. Cable shall be color coded.

8B.6.3.2 Bare copper wire for grounding, bonding, and other uses, when not specified otherwise, shall conform to specification QQ-W-343.

8B.6.3.3 Secondary line and service wires and cables of the weather-resistant, insulator-supported type shall conform to J-C-145. Service-entrance and service-drop wires and cables shall conform to Specification J-C-30.

8B.6.3.4 Wires and Cables for locations and uses not specified above shall be suitable for the purpose and in accordance with the National Electrical Code.

8B.6.4 Wood Poles, Cross Arms and Hardware.

8B.6.4.1 Poles shall be Southern Yellow Pine or Douglas Fir, length and class as indicated, conforming to ANSI 05.1, machine trimmed to a smooth surface, and free of crooks or sweeps exceeding 1 inch per 10 feet of pole length. Pole shall be bored, gained and roofed before treatment. Plastic pole caps shall be added after treatment. Plastic caps shall have sealing rings raised to a height of 1/4 inch. They shall be filled to the top of the sealing ring with elastigum. Four tabs shall extend below the main body of the cap for nailing to the pole. One 1-1/4 inch aluminum nail shall be driven through each tab. No nails or holes shall be permitted on top of the pole. Poles shall be pressure treated with Chromated Copper Arsenate (CCA) or Ammoniacal Copper Arsenite (ACA) in accordance with TT-W-571 andthe American Wood Preserver's Association Book of Standards, Standard C4.

8B.6.4.2 Hardware shall be of standard type manufactured for pole line construction. Miscellaneous steel hardware, including bolts, washers, locknuts, eyenuts, guy attachments, guy clamps, etc., shall conform to MIL-H-55053, shall be hot-dip galvanized, and shall be capable of withstanding the maximum loading imposed thereon with the appropriate safety factors as specified by the National Electrical Safety Code for grade "B" construction in the Medium Loading District.

8B.6.4.3 Storage and Handling of Poles. Poles held in storage for more than 2 weeks shall be stored in accordance with ANSI 05.1. The handling of poles shall be in accordance with ANSI 05.1, except that pointed tools capable of producing indentations more than 1 inch in depth shall not be used.

8B.6.5 Ground Rods.

8B.6.5.1 Copper-Encased Ground Rods shall be rolled to a commerically round shape from a welded copper-encased steel manufactured by a molten-welding process or by the electro-formed process (Molecularly Bonded). They shall have an ultimate tensile strength of 75,000 pounds per square inch (psi) and an elastic limit of 49,500 psi. The rods shall not be less than 3/4 inch in diameter by 10 foot in length and shall have a hard, clean, smooth, continuous, copper surface and the proportion of copper shall be uniform throughout the length of the rod. The copper shall have a minimum wall thickness of 0.013 inch at any point on the rod.

8B.6.6 Guys and Anchors.

8B.6.6.1 Guy strand shall be high strength 3/16 inch in diameter, 7 strand, electrolytic or hot-dip galvanized steel with a minimum breaking strength of 8,000 pounds.

8B.6.6.2 Anchor and anchor rods shall be hot-dip galvanized. Anchor rods shall be designed for attachment to the anchors with which they are to be used.

(1) Plate type anchors shall have an area of at least 144 square inches, and shall be rated by the manufacturer for 10,000 pounds or more in "loose-dry" soil. The rods for plate anchors shall be at least 8 feet long and 5/8 inch in diameter, with a thimble-eye for attachment of the guy cable.

8B.6.7 Metering shall consist of a socket-mounted outdoor watthour meter mounted on the pole.

(a) Meter. One watt-hour meter and socket shall be provided meeting the requirements of applicable NEMA standards, coordinated to the transformer secondary voltage. Meter shall be suitable for 120/240 volt, 3 phase, 4-wire system. Meter shall be the ground socket type complete with a box type socket having automatic circuit-closing bypass. The watt-hour meter shall be provided with not less than four pointer-type kilowatt-hour registers and a universal class 2 indicating maximum demand register, sweep pointer indicating type, with a 30 minute interval. Meter accuracy shall be within plus or minus one percent.

8B.7 Installation

8B.7.1 General Requirements. Electrical installations shall conform to the National Electrical Safety Code, the National Electrical Code, and to the requirements specified herein.

8B.7.2 Installation of Underground Service.

8B.7.2.1 Underground Conduit for Service Feeders. Underground conduit for service feeders into buildings shall be PVC coated rigid steel from the service equipment to a point five feet beyond the building and projections thereof and, when not extended beyond this point, the ends of the conduit shall be protected by threaded metal caps; the threads shall be coated with graphite grease or other suitable coating.

8B.7.2.2 Backfilling. Backfilling shall be in layers not more than 8 inches deep and shall be thoroughly tamped. The first layer shall be earth or sand, free from particles that would be retained on a 1/4 inch sieve and extending not less than 3 inches above the top of the conduit. The succeeding layers shall be excavated material having stones no larger than would pass through a 4-inch ring. The backfill may be moistened. The backfill shall be level with the adjacent surface except that in sodded areas a space equal to the thickness of the sod shall be left.

8B.7.2.3 Reconditioning of Surface. The existing soil road surface disturbed during the installation of underground conduit, shall be restored to its original elevation and condition. Road stabalizing material shall be preserved carefully and replaced after the backfilling is completed.

8B.7.3 Installation of Overhead Service.

8B.7.3.1 Overhead Pole Lines. Overhead pole lines shall conform to the requirements of the National Bureau of Standards Handbooks H30 and 81 for grade "B" construction, medium loading and as further specified herein. All streets, alleys, roads, and drives shall be considered "Public". Pole configurations shall be as indicated, conforming to LANTDIV Pole Plates, No. 16-21.

8B.7.3.2 Pole Setting. In normal firm ground, minimum pole setting depths shall be as listed in the following table. Poles in straight runs shall be in a straight line. Adjacent poles shall be with gains fading in opposite directions. Every second pole shall have crossarms facing in same direction. Poles shall be set to maintain as even a grade as practicable. When the average ground run is level, consecutive poles shall not vary more than 5 feet in height. When ground is uneven, poles differing in length shall be kept to a minimum by locating poles to avoid the heghest and lowest ground points. If it becomes necessary to shorten a pole, a piece shall be sawed off the top and the shortened end of the pole given an application of hot preservative. Holes shall be dug large enough to permit the proper use of tampers to the full depth of the hole. Backfill shall be placed in the hole in 6-inch maximum layers, and thoroughly tamped. Surplus earth shall be placed around the pole in a conical shape and packed tightly to drain water away.

(1) Table of Pole-Setting Depths

Length Overall (feet)	Setting Depth, Minimum (feet and inches) Straight Lines	Curves, Corners, and Points of Extra Strain
20	5-0	5-0
25	5-6	5-6
30	5-6	5-6
35	6-0	6-0
40	6-0	6-6
45	6-6	7-0
50	7-0	7-6
55	7-6	8-0
60	8-0	8-6

8B.7.3.3 Guys. Guys shall be installed at ends of lines. Strain insulators shall be attached to guys by means of 3-bolt guy clamps, wire rope clips, or preformed gripping devices. Guy anchors shall be installed with anchor rods in direct line with the guy and load to be supported. Anchors shall be located at a distance from the base of the pole at least 1/2 the height of the guy attachment.

8B.7.3.4 Circuit Protective Apparatus. Lightning arresters and fused cutouts shall be provided on primary lines at each transformer pole and at other locations where indicated.

8B.7.3.5 Cable Risers and Poles. Cable risers on poles, other than grounding conductors, shall be installed in conduit. The conduit for cable risers shall be encased in concrete to a point 6 inches above finished grade. The conduit shall be of the rigid metal type. Conduit shall be secured to the pole by means of suitable clamps or straps spaced not over 4 feet apart.

8B.7.4 Splices in Wires and Cables. All splices shall be in accessible locations. Tapes shall be as specified hereinbefore. Metallic shield or armor, where used, shall be made continuous by soldering or brazing the same kind of metal to the original shield or armor on each side of the splice. In manholes , handholes, and vaults, splices in shielded cable shall include a shield ground connection brought out through the jacket in a watertight manner; this connection shall be grounded in the installation of the splice. Cable splices in manholes shall be supported by racks on each side of the splice. Cables shall be installed at top and bottom of calbe racks leaving center space open for future cables. One spare 3-insulator rack arm shall be provided for each cable rack in each manhole. The Contractor shall use particular care in making up joints and terminations in aluminum conductors. Surface oxides shall be removed by cleaning with a wire brush or emery cloth. Joint compound shall be used on conductors and U.L. listed solid aluminum connectors shall be used for connecting

aluminum to aluminum. When connecting aluminum to copper, connectors specifically designed for this purpose shall be used. Splices in insulated power and lighting cables for service exceeding 600 volts and in telephone cables shall be made by splicers having not less than three years experience in splicing such cables; the contractor shall furnish satisfactory evidence of such experience.

8B.7.4.1 Splices in Insulated Power and Lightning Wires and Cables Without Metallic Sheath. Conductors shall be joined securely both mechanically and electrically by one of the following methods: (1) twisting the conductors together and soldering, (2) twisting the conductors and forming a "Western Union" joint, (3) Exothermic weld process, or (4) by the use of solderless connectors. Insulating tapes, hot-molded composition covers, or other approved equivalent, having an insulation value equivalent to the conductor insulation may be used for splices in cables rated 600 volts and below. Splices in cross-linked polyethylene-insulated wires and cables shall be the cast type, watertight taped type, tape-over-cast type, vulcanized type, or other approved type as indicated or specified. The work shall be in accordance with the recommendations of the manufacturer of the wires, cables, and/or splicing materials. All splices shall be suitable for the rated insulation level of the cable.

(1) Cast-type splice. The insulation shall be provided by means of a molded casting process employing a thermosetting epoxy resin insulating material. The resin material shall be applied by a gravity poured method or by a pressure injected method. The component materials of the resin insulation shall be in a packaged form ready for convenient mixing without removing from the package. The gravity poured method shall not be used for splices in shielded cable.

(2) Cast-type splice. The insulation shall be provided by means of a molded casting process employing an ethylene propylene rubber splicing compound which results in an inseparable bond between the splicing material and the cable insulation. The molding process shall include injection of the molding material into the mold so as to insure void free splices.

(3) Watertight Taped Type Splice. The splice shall consist of an approved connector, self-fusing tape (splicing compound), self-bonding semi-conducting tape, tinned copper shielding tape or braid, and plastic tape.

(4) Tape-Overcast Type Splice. This splice shall be as specified hereinbefore for the watertight taped type, overcast with an epoxy resin construction as specified hereinbefore for the cast type pressure method.

(5) Vulcanized Type Splice. The vulcanizing process shall be a heat-pressure process on an approved type and employing materials and equipment suitable for the type and voltage of cables for which it is used. Materials used in the splicing process shall be fully and permanently compatible with materials in the cables.

8B.7.4.2 Splices in Overhead Line Conductors. Splices in overhead line conductors shall be made with twist sleeve or compression type connectors. Splices in insulated conductors shall be covered with an insulation equivalent to that of the conductors and an approved weatherproof tape overall.

8B.7.5 Termination of Insulated Power and Lighting Cables. All insulated power and lighting cables shall be properly terminated. Terminations shall be made by adequately trained personnel, using methods and materials suitable for the work and in accordance with the recommendations of the manufacturer of the cable and/or terminating materials or kit. Terminations of cable for service exceeding 600 volts shall be made by personnel having not less than 3 years experience as a licensed electrician, including adequate experience in the splicing or terminating of high-voltage insulated cable; the experience shall be certified and approved. Terminations and/or terminating devices shall be capable of withstanding the tests specified for the cable installations, and for service exceeding 600 volts, shall be rated in accordance with the IEEE standard for potheads, publication No. 48. Terminations of single- and multi-conductor cables shall include the securing and sealing of the sheath and insulation of the cable conductors, stress relief and grounding of cable shields of shielded cable, and grounding of neutral conductors, metallic sheaths, and armor. Cables and cable terminations shall be adequately supported so as to avoid any excessive strain on the termination and the conductor connection.

8B.7.6 Grounding shall be in accordance with the National Electrical Code and the National Electrical Safety Code, except that grounds and grounding systems shall have a resistance to solid earth ground not exceeding the following values:

	Ohms
For grounding over metal enclosures of primary voltage electrical and electrically operated equipment	10
For lightning arrester grounds on pole line distribution systems	10
For grounding secondary distribution systems (neutral) non-current carrying metal parts associated with distribution systems	25
For grounds not covered above	25

When work in addition to that indicated and specified is directed, in order to obtain the specified resistance to ground, the provisions of the contract respecting an adjustment for changed conditions shall apply.

8B.7.6.1 Grounding Electrodes. Unless specified otherwise, artifical grounding electrodes shall be rods of cone-pointed copper-encased steel or stainless steel. Approved copper-alloy clamp shall be brazed to the upper end of ground rods, and ground wires shall be securely attached thereto by means of a bolted connection. Ground rods shall be driven to a depth of not less than 11 feet and shall have diameters sufficient to permit driving to the necessary depth without being damaged, but in no case shall the diameters be less than hereinbefore specified.

8B.7.6.2 Grounding for Overhead Pole Lines. Grounding shall conform to the National Electrical Safety Code, except that the resistance to ground of the ground system not exceed 10 ohms. The grounding terminal of each lightning arrester, the tank of each transformer, the operating mechanism of pole-top switches, cable messengers, non-current carrying parts of equipment, and the neutral(s) shall be solidly interconnected and connected to ground. Grounding conductors shall be soft-drawn copper, having a current capactiy of at least 20 percent of that of the largest conductor to which it is connected, but not smaller than No. 6 AWG and not smaller than indicated on the drawings. Lightning arresters shall be grounded with a conductor of soft-drawn copper not smaller than No. 4 AWG. All connections shall be made with solderless connectors or by the molded fusion-welding process. Ground conductors shall be connected to a copper-clad-steel ground rod not less than 3/4 inch in diameter by ten feet long. The ground rod shall be driven at least 11 feet into the ground. Where this condition cannot be obtained with one rod driven 11 feet in the ground, a longer rod, deep-driven section rods, or additional rods shall be installed, until the required ground resistance is obtained, except that not more than three 10-foot ground rods will be required. Grounding conductors shall be protected by half-round plastic or fiber molding securely mounted and extending not less than 8 feet above grade and throughout the communication and transformer spaces.

8B.8 Field Tests. The contractor shall provide all labor, equipment and incidentals required for testing, except that the Government will provide electrical power required for the tests. All defective material and workmanship disclosed shall be corrected by the contractor at no cost to the Government. The contractor shall show by demonstration in service that all circuits and devices are in good operating condition. Tests shall be such that each item of control equipment will function not less than five times.

8B.8.1 Insulation resistance test for systems 600 volts and less. After all wiring is completed and connected ready for operation, but prior to placing systems in service and before any branch circuit breakers are closed, insulation resistance tests shall be made in all feeder and

subfeeder circuits. The insulation resistance between conductors and between each conductor and ground shall be measured. Measurements shall be made with an instrument capable of making measurements at an applied potential of 500 volts. Readings shall be taken after the voltage has been applied for a minimum of one minute. The minimun insulation resistance for circuits of No. .2 AWG conductors shall be 1,000,000 ohms. For circuits of No. 10 AWG conductors or larger conductors, a resistance based on the allowable ampacity of the conductor as fixed by NFPA 70 shall be as follows:

25 through 50 amperes	250,000 ohms
51 through 100 amperes.	100,000 ohms
101 through 200 amperes.	.50,000 ohms
201 through 400 amperes.	.25,000 ohms
401 through 800 amperes.	.12,000 ohms
Over 800 amperes	5,000 ohms

8B.8.2 Grounding system shall be tested to assure continuity and compliance with the requirement that ground resistances not exceed the values hereinbefore specified. Ground resistance measurements of each ground rod shall be taken and certified by the Contractor. Upom completion of the project, the Contractor shall submit to the OICC the measured ground resistance of each ground rod and grounding system, indicating the location of the rod and grounding system, as well as the resistance and soil conditions at the time the measurements were made. Ground resistance measurements shall be made in normally dry weather, not less than 48 hours after rainfall, and with the ground under test isolated from other grounds. Ground resistance shall also be measured from each piece of equipment to the ground electrode.

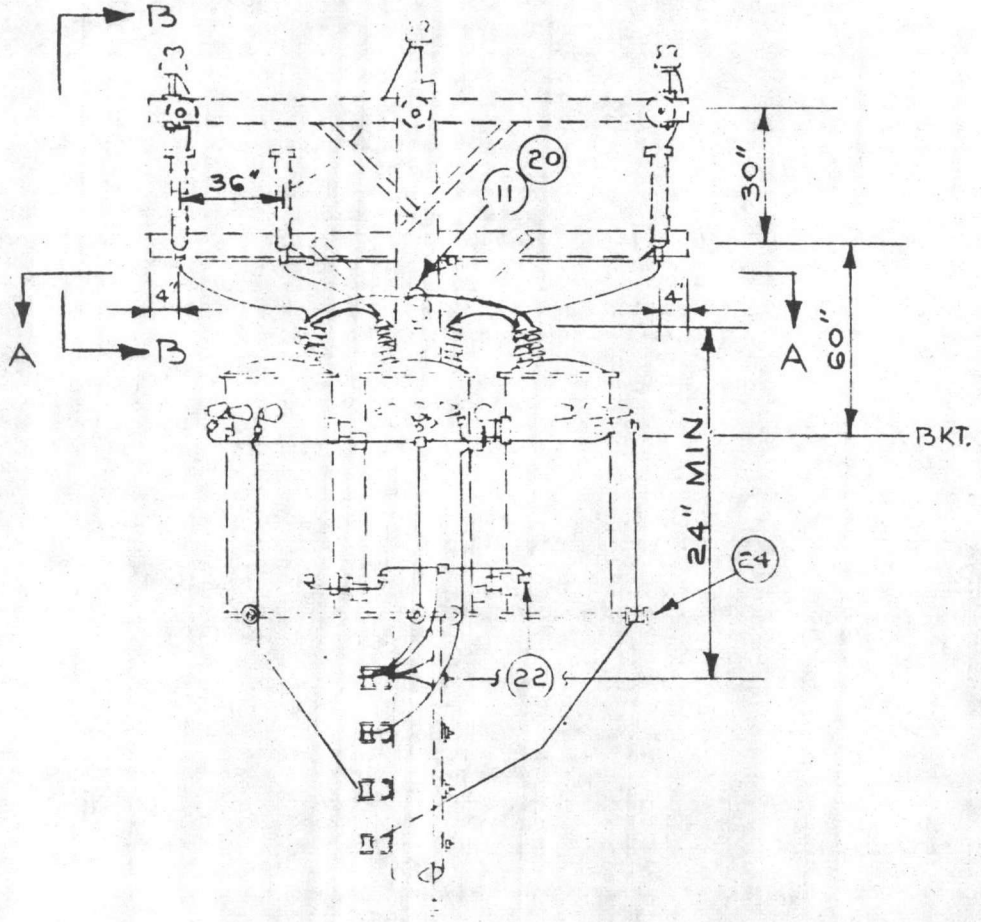

T T T

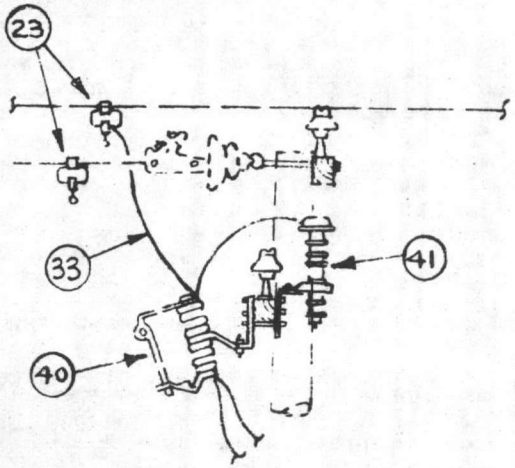

SECTION "B-B"

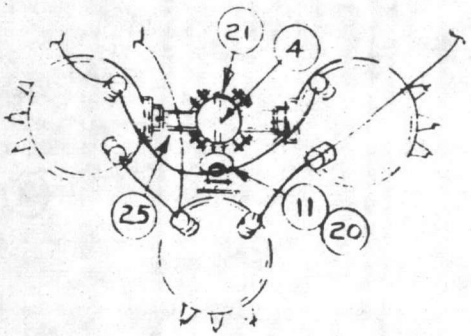

SECTION A-A

LANTDIV PLATE 16-15

3-74

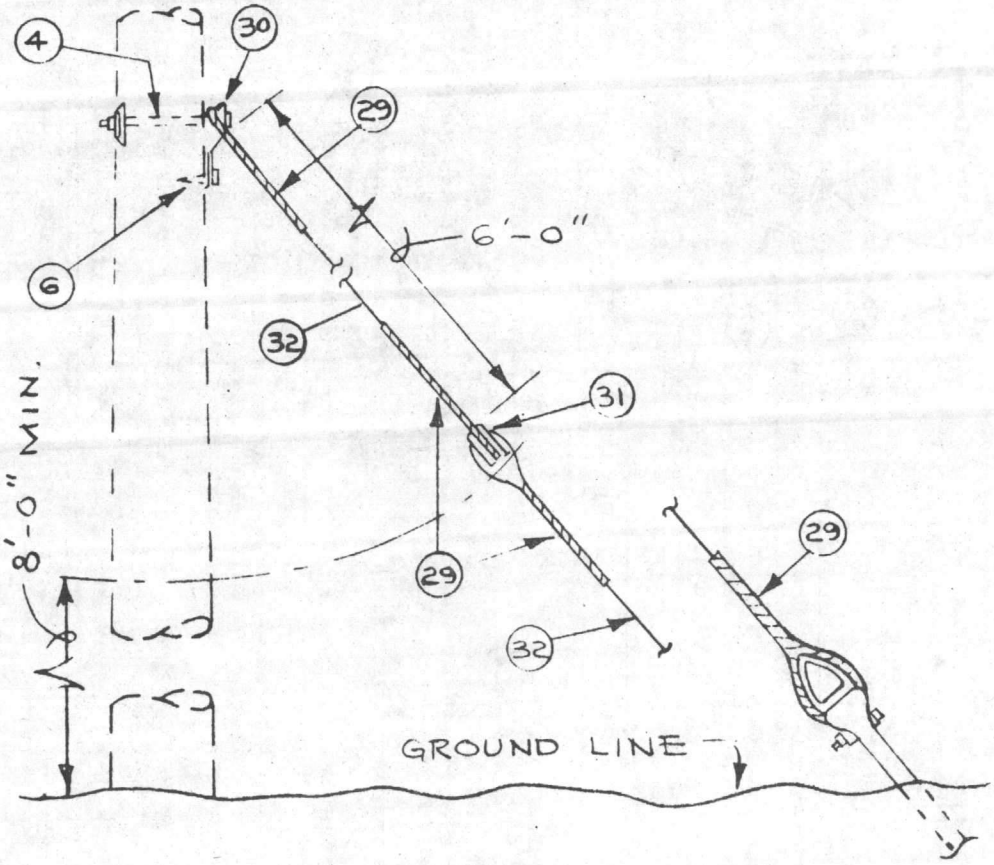

GUY

(SIZE AS SPECIFIED)

LANTDIV PLATE 16-18

9-74

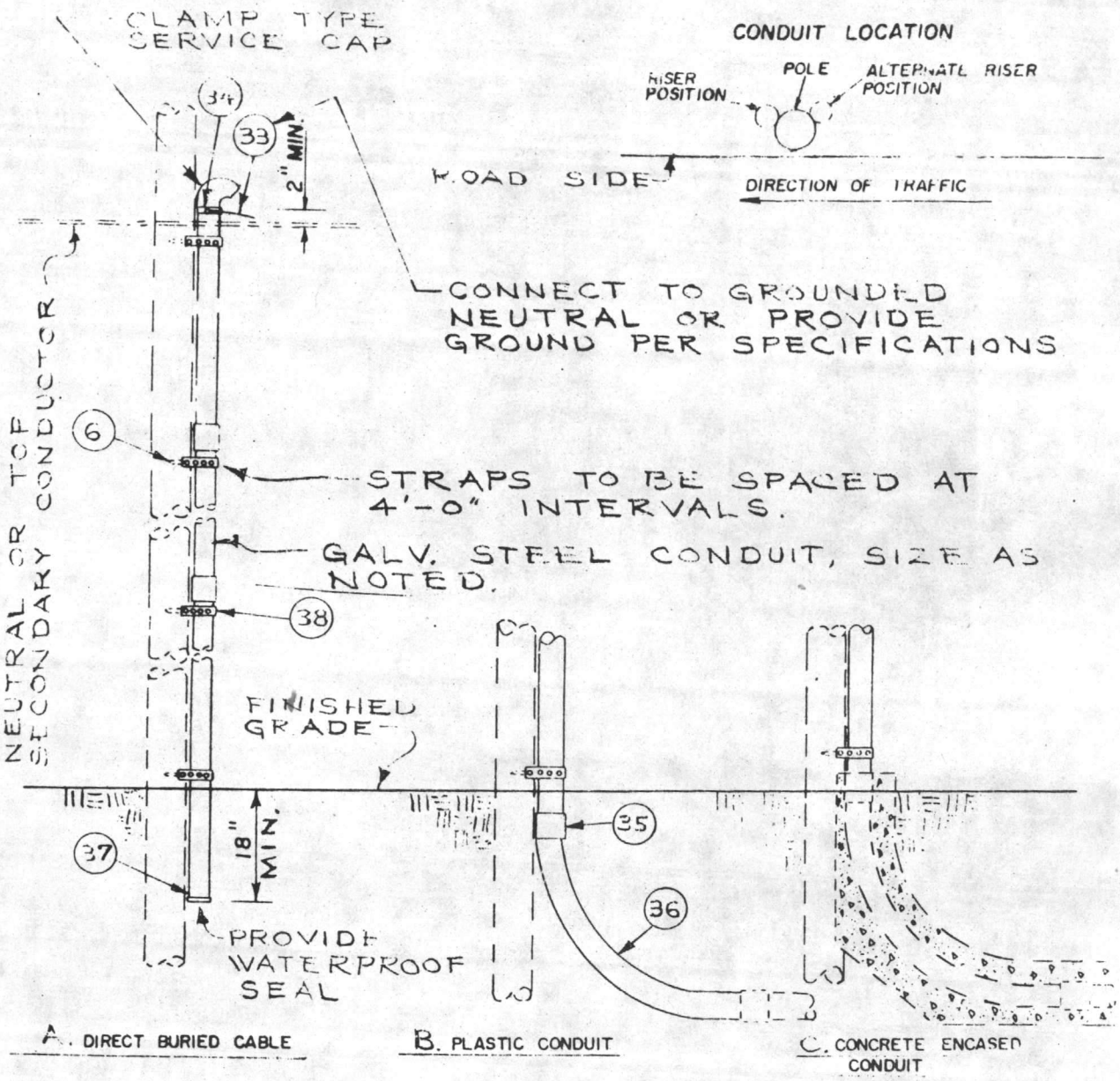

CONDUIT RISER
(SIZE AS INDICATED)

LANTDIV PLATE 16-21

9-74

END OF SECTION 8B

NEW DECISION

STATE: North Carolina
DECISION NUMBER: AR-4048

COUNTY: Onslow
DATE: Date of Publication

DESCRIPTION OF WORK: Building Construction (excluding single family homes and garden type apartments up to and including 4 stories).

67-NC-1-B 1 of 1

	Basic Hourly Rates	H & W	PENSIONS	VACATION	APP.TR.
Asbestos workers	5.65				
Bricklayers	6.00				
Carpenters	3.00				
Cement masons	4.33				
Electricians	4.37				
Ironworkers:					
Structural, Ornamental, Reinforcing	3.00				
Laborers:					
Laborers	2.75				
Lathers	5.00				
Painters, brush	4.25				
Plasterers	5.65				
Plumbers & steamfitters	5.51				
Roofers	3.00				
Sheet metal workers	3.44				
Truck Drivers	2.75				
Welders - rate for craft					
POWER EQUIPMENT OPERATORS:					
Backhoes	3.38				
Cranes	5.25				
Front end loaders	4.00				
Tractors	4.10				

SOURCE: FEDERAL REGISTER, VOL. 39, NO. 208 - FRIDAY, OCT 25, 1974